Struers
Ensuring Certainty

Coolimat-2000

Static Filter

Instruction Manual

Original Instructions

CE

Doc. no.: 16527026-04_A-en
Date of release: 2026.01.27

Copyright

The contents of this manual are the property of Struers ApS. Reproduction of any part of this manual without the written permission of Struers ApS is not allowed.

All rights reserved. © Struers ApS.

Table of Contents

1 About this manual **5**
1.1 Accessories and consumables 5
2 Safety **6**
2.1 Intended use 6
2.2 Safety precautions 6
2.3 Safety messages 7
2.4 Safety messages in this manual 8
3 Get started – introduction **10**
3.1 Device description for Coolimat-2000 Static Filter 10
3.2 Overview of Coolimat-2000 Static Filter 11
3.3 Overview of the control panel 12
3.3.1 Rear view of the control unit 13
3.4 Emergency stop 13
4 Transport and storage **14**
5 Installation **15**
5.1 Unpack Coolimat-2000 15
5.2 Check the packing list 16
5.3 Lift Coolimat-2000 17
5.4 Assemble Coolimat-2000 Static Filter 17
5.4.1 Mount a filter tube 18
5.4.2 Water-level indicator 19
5.4.3 Recirculation pump 19
5.5 Prepare the cooling unit for use 19
5.5.1 Water supply 19
5.5.2 Fill the tank 19
5.5.3 Power supply 20
5.5.4 Verify correct installation 21
5.6 Connect Coolimat-2000 to the cutting machine 21
5.7 Noise level 21
6 Operate the device **22**
6.1 Start Coolimat-2000 22
6.2 Power off 22
6.3 Replace the filter tube of the static filter 22

7 Maintenance and service **23**
7.1 Daily 24
7.1.1 The coolant 24
7.1.2 Check the coolant 24
7.1.3 Replace the coolant 25
7.2 Weekly 26
7.3 Monthly 26
7.4 Annually 26
7.4.1 Test the safety devices 26
7.5 Spare parts 26
7.5.1 Spare parts list 27
7.6 Service and repair 27
7.7 Disposal 27
8 Troubleshooting **28**
9 Technical data **29**
9.1 Technical data sheet 29
9.2 Safety Related Parts of the Control System (SRP/CS) 33
9.3 Diagrams 34
9.3.1 Circuit diagram 34
9.3.2 Block diagram – 16523051 A 35
9.4 Legal and regulatory information 36
10 Manufacturer **36**
Declaration of Incorporation of Partly Completed Machinery **39**

1 About this manual

CAUTION
Struers equipment must only be used in connection with and as described in the Instruction Manual supplied with the equipment.

Note
Read the Instruction Manual carefully before use, and save it for future reference.

Note
If you want to view specific information in detail, see the online version of this manual.

1.1 Accessories and consumables

Accessories

For information about the available range, see the Coolimat-2000 brochure on our website at www.struers.com.

Consumables

The machine is designed to be used only with Struers consumables specifically designed for this purpose and this type of machine.

Other products may contain aggressive solvents, which dissolve e.g. rubber seals. The warranty may not cover damaged machine parts (e.g. seals and tubes), where the damage can be directly related to the use of consumables not supplied by Struers.

For information about the available range, visit our website at www.struers.com.

Required

- A large pump with a capacity of 65 L/min at 1 bar/17 gallons/min).
- Additive for the recirculation cooling unit to prevent corrosion and improve cutting results.
- Filter paper. We recommend that you use filter paper rolls with a tensile strength of 20N and a length of 100 m/328 ft.

Recommended

- For easy cleaning, use a plastic inlay (liner) to collect surplus waste material.

Optional

- An additional recirculation pump. – A second pump can be mounted to supply coolant to 2 machines. When purchased from Struers, the pump is equipped with a cable that can be plugged directly into the rear of the control unit.

2 Safety

2.1 Intended use

Coolimat-2000 is intended for filtration, cooling and recirculation of cooling fluid containing waste from machining of materials. Coolimat-2000 is designed for use with Struers grinding and cutting machines.

The machine must be operated only by skilled/trained personnel. The machine is for use in a professional working environment (e.g. a materialographic laboratory).

The machine is only intended to be used with cooling fluids and filter materials which are specified for this purpose and this type of machine. For the intended Coolimat-2000 function, a signal from the machine is required.

Do not use the machine for the following	Filtering any type of explosive and/or flammable and/or unstable material from the cutting process. Furthermore, the machine must not be used with consumables (cooling fluids, filter materials) that are not compliant with function and materials of Coolimat-2000.
Model	Coolimat-2000 SF (Static Filter)

2.2 Safety precautions

Read carefully before use

1. The machine must be installed in compliance with local safety regulations. All functions on the machine and any connected equipment must be in working order.
2. The operator must read the safety precautions and Instruction Manual, as well as relevant sections of the manuals for any connected equipment and accessories.
3. Do not use cooling liquid other than water mixed with additives, which are compliant with the machine.
4. The operator must read the Instruction Manual and, where applicable, the Safety Data Sheets for the applied consumables.
5. Observe the current safety regulations regarding handling, mixing, filling, emptying, and disposing of coolant with additives. Take care, the cooling fluid may be hot!
6. Keep a copy of the manual in an easy-to-access place for future reference.
7. Ignoring this information and mishandling of the equipment can lead to severe bodily injuries and material damage.
8. Mishandling or modyfying the equipment can lead to severe bodily injuries and material damage.

9. To achieve maximum safety and lifetime of the machine, use only original Struers consumables.
10. The machine must be disconnected from the electrical power supply before any service.
11. Always wear protective gloves and safety goggles when you clean and fill up the tank.
12. The recirculation pump must be disconnected from the electrical power supply before it can be removed from the cooling unit. Use of safety shoes is recommended when handling the pump.
13. The Static Filter on the tank may become heavy and should be handled by 2 persons when replaced.
14. All safety functions must be intact and in working order. If they are not, they must be replaced or repaired before the machine can be used.
15. Keep the area around the tank clean and free from spills.
16. If you observe malfunctions or hear unusual noises, switch off the machine and call technical service.
17. Struers recommend the use of an exhaust system as the cutting process may emit harmful gasses or dust.
18. In case of fire, alert bystanders and the fire brigade.Disconnect the electrical power supply.Use a powder fire extinguisher.Do not use water.
19. The machine must be installed in a well-ventilated and well-lit (300 lux) room.
20. Struers equipment must only be used in connection with and as described in the Instruction Manual supplied with the equipment.
21. The machine is designed to be used only with Struers consumables specifically designed for this purpose and this type of machine.
22. If the equipment is subjected to misuse, incorrect installation, alteration, neglect, accident or incorrect repair, Struers will accept no responsibility for damage to the user or the equipment.
23. Dismantling of any part of the equipment, during service or repair, should always be performed by a qualified technician (electromechanical, electronic, mechanical, pneumatic, etc.)

2.3 Safety messages

Struers uses the following signs to indicate potential hazards.

ELECTRICAL HAZARD
This sign indicates an electrical hazard which, if not avoided, will result in death, or serious injury.

WARNING
This sign indicates a hazard with a medium level of risk which, if not avoided, could result in death, or serious injury.

WARNING: LASER BEAM
This sign indicates a laser beam hazard which, if not avoided, could result in minor, moderate, or serious injury.

WARNING: OPTICAL RADIATION
This sign indicates an optical radiation hazard which, if not avoided, could result in minor, moderate, or serious injury.

CRUSHING HAZARD
This sign indicates a crushing hazard which, if not avoided, could result in minor, moderate, or serious injury.

CAUTION
This sign indicates a hazard with a low level of risk which, if not avoided, could result in minor, or moderate injury.

Emergency stop
Emergency stop

General messages

Note
This sign indicates that there is a risk of damage to property, or a need to proceed with special care.

Hint
This sign indicates that additional information and hints are available.

2.4 Safety messages in this manual

CRUSHING HAZARD
Wear safety shoes when handling heavy machinery.

ELECTRICAL HAZARD
Switch off the electrical power supply before installing electrical equipment.

ELECTRICAL HAZARD
The machine must be earthed (grounded).

ELECTRICAL HAZARD
Make sure that the actual electrical power supply voltage corresponds to the
Incorrect voltage can damage the electrical circuit.

WARNING
Disconnect the power before performing any maintenance work.

CAUTION
Struers equipment must only be used in connection with and as described in the Instruction Manual supplied with the equipment.

CAUTION
Prolonged exposure to loud noises may cause permanent damage to a person's hearing.
Use hearing protection if the exposure to noise exceeds the levels set by local regulations.

CAUTION
Wear gloves and safety goggles when you handle coolant.

CAUTION
Take care, the coolant may be hot.

CAUTION
Wear safety shoes when you handle the pump.

CAUTION
Avoid spilling coolant when you fill, empty or top up the tank.

CAUTION
Wear safety shoes with slip-resistant soles.

WARNING
Do not use the machine with defective safety devices.
Contact Struers Service.

WARNING
In case of fire, alert bystanders, the fire brigade and cut power. Use a powder fire extinguisher. Do not use water.

WARNING
Safety critical components must be replaced after a maximum lifetime of 20 years. Contact Struers Service for information.

3 Get started – introduction

3.1 Device description for Coolimat-2000 Static Filter

Coolimat-2000 Static Filter is a filtration and recirculation machine for coolant with waste/debris, typically swarf and particles from cut-off wheels. It is intended to filter and cool down the coolant on cutting and/or grinding machines.

Coolant is directed into the filter tube which is placed on a metal mesh. Filtered coolant is collected in a tank underneath the filter unit and is then recirculated to the cutting machine using a pump which is inserted in the tank. The coolant must be filled/topped up, correctly mixed and replaced according to specifications.

When the filter tube is full, it is easily replaced by the operator.

Coolimat-2000 does not have start and off buttons. It is controlled from the grinding- or cutting machine via a control cable (slave function). This means, that it will typically start and stop simultaneously with a master, and stand by when circulation is not required.

If the emergency stop is activated on the grinding or cutting machine, Coolimat-2000 will also stop. A category 0 emergency stop cuts the power to Coolimat-2000.

3.2 Overview of Coolimat-2000 Static Filter

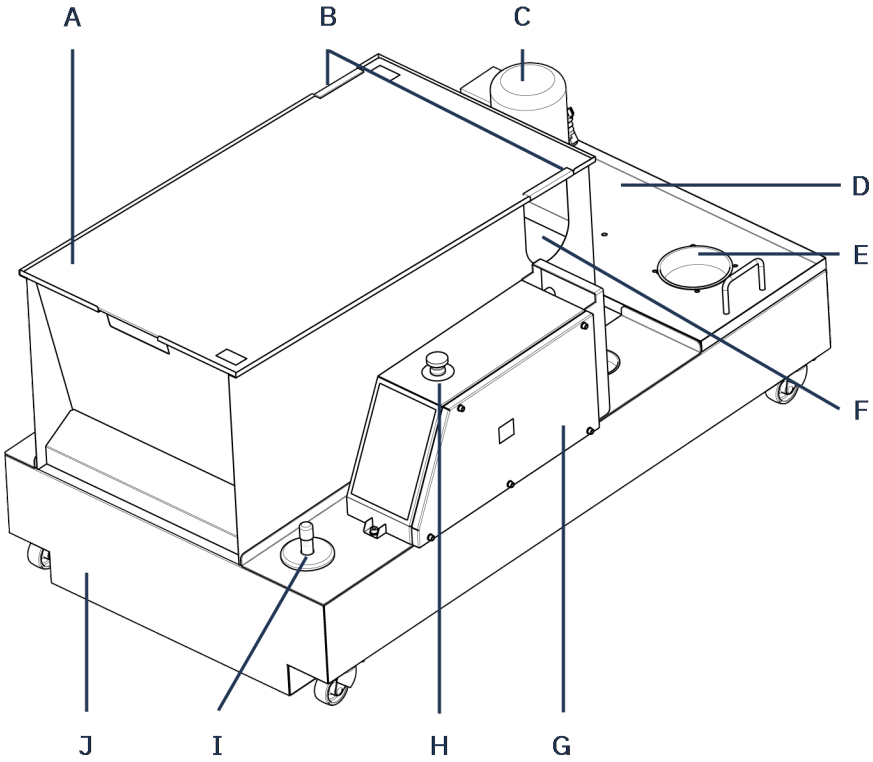

A	Filter unit cover	**F**	Static filter grid
B	Water inlet duct	**G**	Control unit
C	Pump	**H**	Emergency stop button
D	Pump cover	**I**	Water level indicator
E	Pump housing hole	**J**	Coolant tank (wheel mounted)

3.3 Overview of the control panel

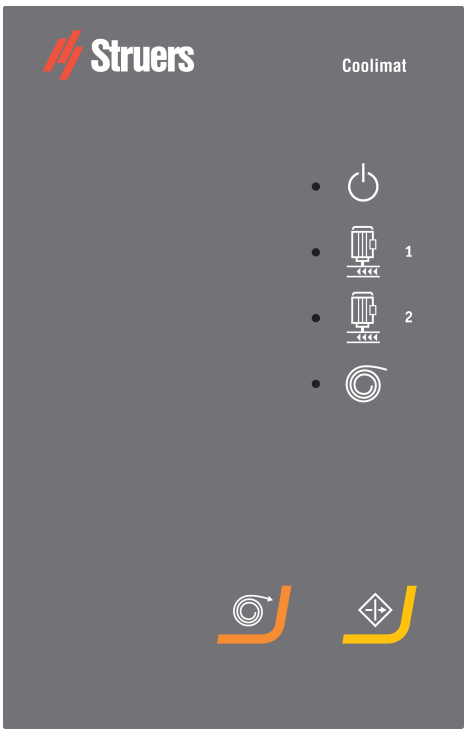

	On/Off (power) Green LED: Standby mode. Red LED: Unit error (after power-up or pump or emergency stop).
	Pump (pump 1 + 2) Green LED: Pump is energized. Red LED: Pump error (not connected or pump failure/overload).
	Paper winding Green LED: Paper winding is energized. Red LED: Paper-winding error (e.g. the pump is not connected, it is overloaded, or there is a unit error). (Only for the band filter version).
	Manual paper winding Only for band filter version, to start winding of paper.
	Resume To activate the unit after power up or emergency stop.

3.3.1 Rear view of the control unit

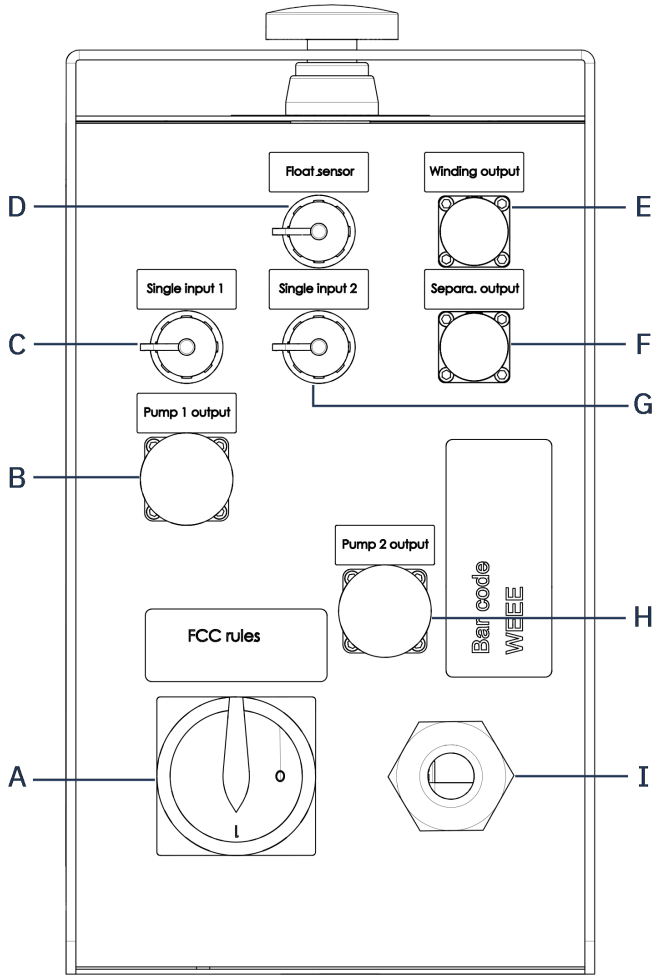

A	Main switch	**E**	Winding motor output (not used)
B	Pump 1 output	**F**	Optional accessory output (not used)
C	Single input 1 signal to control Pump 1 output	**G**	Single input 2 signal to control Pump 2 output (not used)
D	Floater sensor input (not used)	**H**	Pump 2 output (not used)
		I	Electrical power supply cable

3.4 Emergency stop

The Emergency stop button is located on the top of the control unit.

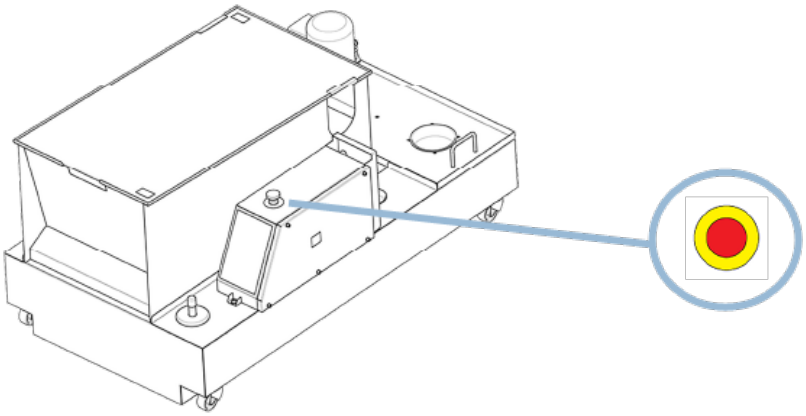

The Emergency stop button initiates a safety stop of all movements and sources of energy.

The Emergency stop work both in conjunction with the cutting machine and independently.

1. Push the button to activate.

Emergency stop
Do not use the Emergency stop button for operational stop of the machine during normal operation.

2. Turn the button clockwise to release.

Emergency stop
Before releasing (disengaging) the Emergency stop, investigate the reason for activating this, and take any necessary corrective action.

4 Transport and storage

If, at any time after the installation, you have to move the unit or place it in storage, there is a number of guidelines we recommend that you follow.

- Package the unit securely before transportation. Insufficient packaging could cause damage to the unit and will void the warranty. Contact Struers Service.
- We recommend that you use the original packaging and fittings.

Transport of Coolimat-2000

1. Disconnect the power supply.
2. Clean and dry the filter unit and tank.
3. Lift Coolimat-2000 onto the pallet and move it to the new location.

At the new location

1. The facilities required are in place.
2. Check with the Pre-Installation Checklist.

Long-time storage or shipping of Coolimat-2000

1. Remove the control unit, pump(s) and the water-level indicator, and place in a box.
2. Place the box in the tank.

5 Installation

5.1 Unpack Coolimat-2000

Note
We recommend that you keep all original packaging and fittings for future use.

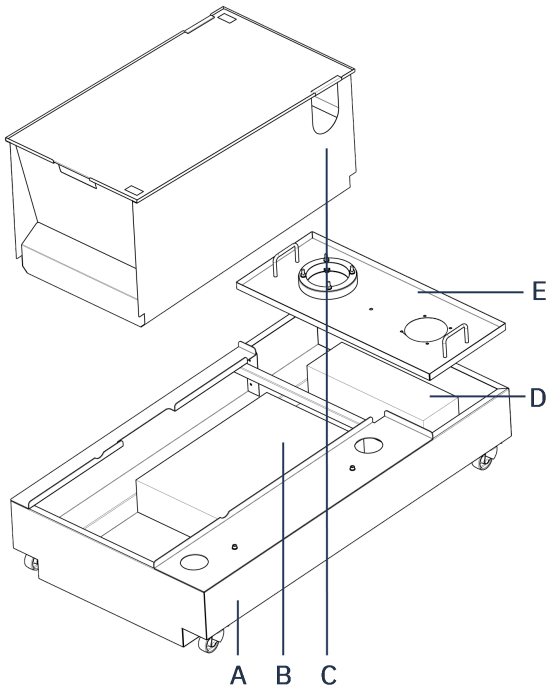

A Tank	**D** Pump
B Loose parts	**E** Pump cover
C Filter unit	

Coolimat-2000 is delivered on a pallet and fastened with cable ties.

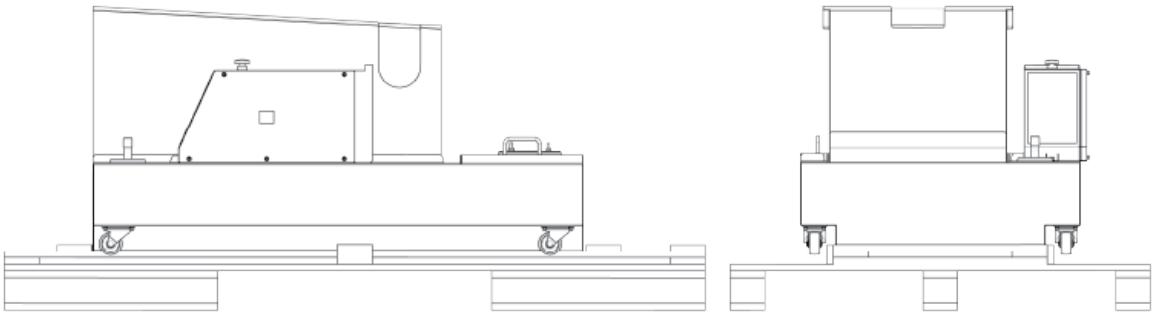

Loose parts and the pump are packed in the tank.

The control unit is packed separately.

1. Remove the transport box.
2. Remove the plastic wrapping.
3. Save the packaging and pallet for future use.
4. Lift off the filter unit and pump cover, and remove the loose parts from inside the tank.

5.2 Check the packing list

Components in the packing box

Pcs.	Description
1	cooling unit tank, 200 l
1	filter unit: Static Filter
1	water level indicator
1	recirculation pump
1	control unit Coolimat-2000
1	24 V/CAN control cable
1	Instruction Manual

Note
The power supply cable comes without a plug.

Note
Static paper tube is not part of the delivery (this is an additional consumable).

5.3 Lift Coolimat-2000

CRUSHING HAZARD
Wear safety shoes when handling heavy machinery.

	Weight
Coolimat-2000 with static filter	88 kg/194 lbs

For more specific details, see Technical data sheet ► 29.

Lifting points (L) and center of gravity

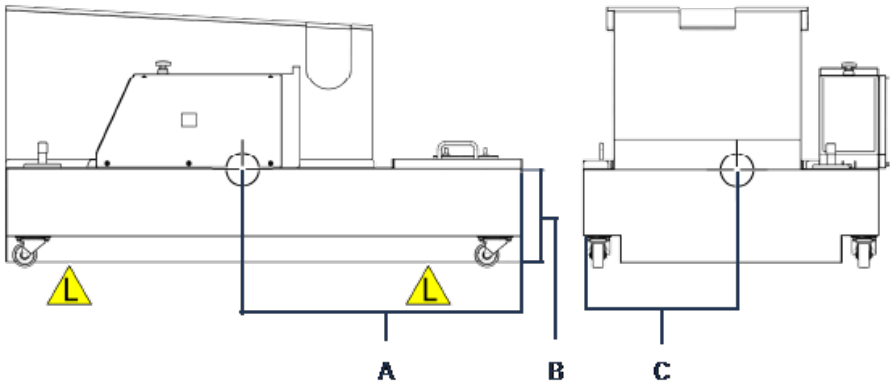

A	751 mm/29.6"	**C**	428 mm/168.5"
B	264 mm/10.4"		

When you use a crane

1. Position the 2 lifting straps under the machine so that they are on the inner side of the rollers.
   – A lifting bar is recommended to keep the 2 straps apart below the lifting point.
   – When you use a crane to lift the tank, place the straps parallel to the front and rear of the tank.
2. Lift the tank from the pallet.
3. Place the tank on the floor next to the machine you wish to connect it to.

When 2 people lift manually

- Lift off the filter unit and remove the loose items from inside the tank.

5.4 Assemble Coolimat-2000 Static Filter

1. Place the filter unit and the pump cover on the tank.
2. Mount the control unit to the tank using the attached screws.

5.4.1 Mount a filter tube

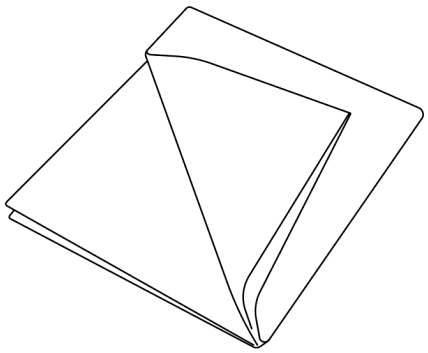

Note
The static filter unit is delivered without static filter tubes. The disposable filter tube is a mandatory consumable.

Note
Always use a filter tube when wet cutting. Otherwise there is no filtration.
Always replace a filled filter tube. Otherwise there is a risk of flooding.
Do not reuse the filter tube.

Note
Remove the filter tube when dry cutting as sparks may reach the filter unit.

Procedure

1. Check that the outlet hose/pipe from the cutting machine

   – is not obstructed, and

   – slopes downwards towards the drain along the whole of its length.
2. Insert 5-10 cm of the filter tube through the quick-release clamp.
3. Mount onto the other end of the pipe, and secure the quick-release clamp approx. 5 cm from the end of the pipe.
4. Straighten the filter and place it on the static filter grid (perforated plate) in the filter unit.
5. Close the static filter transparent cover.

5.4.2 Water-level indicator

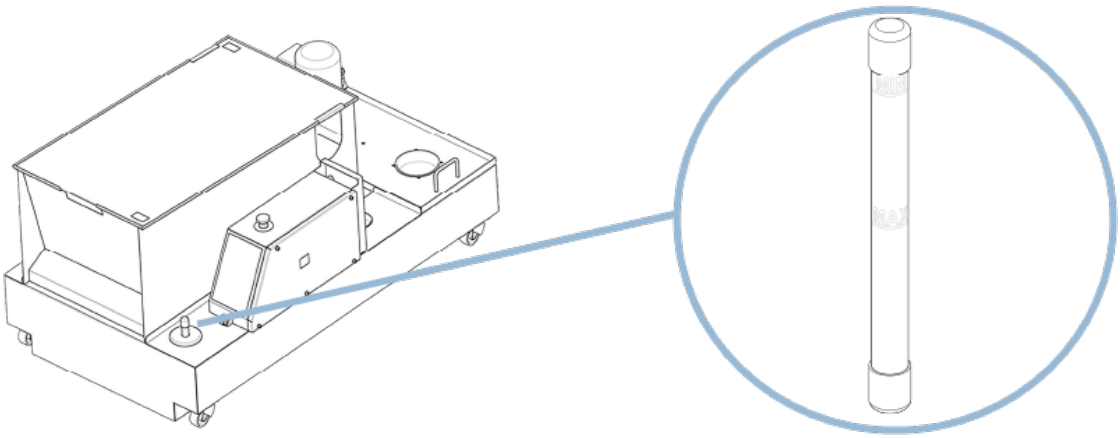

- Place the water-level indicator in the hole provided.

Top up or refill the tank with coolant when the level is too low. See The coolant ► 24.

5.4.3 Recirculation pump

1. Mount the recirculation pump in the hole provided. See Rear view of the control unit ► 13.
2. Connect the pump to the control panel: Single input 1 and Pump 1 output.

5.5 Prepare the cooling unit for use

5.5.1 Water supply

Water inlet

The recirculation tank of Coolimat-2000 is filled with water from the main water supply (no hose is supplied).

Water inlet duct: 115 mm/4.5” dia.

Water outlet – drain

To empty the recirculation tank, use the recirculation pump or use an external dredge pump (not supplied).

Note
The coolant contains additive and cutting swarf and must not be disposed of into the waste-water drain.
Coolant must be disposed of in compliance with local safety regulations.

5.5.2 Fill the tank

1. Use coolant comprised of 192 l/50.7 US gallon water and 8.0 l/2.1 US gallon Cooli Additive or Cooli Additive Plus.

2. Fill the tank with the coolant through the pump housing hole.

Note
Do not fill the tank by pouring water into the cutting chamber, as it would be difficult to check the increasing level in the tank.

Note
The cooling unit is very heavy when it is full.

Before you fill the tank:
- Either check that the cooling unit is in its final position.
- Or ensure that the tank is directly in front of its final position with the control unit facing forwards so that it is ready to be pushed into position without being moved to the left or right.

Note
To avoid corrosion, we recommend the use of Struers Additive, Cooli Additive or Cooli Additive Plus in the coolant (percentage stated on the Additive container). Remember to top up with Struers Additive each time you refill with water.

5.5.3 Power supply

ELECTRICAL HAZARD
Switch off the electrical power supply before installing electrical equipment.

ELECTRICAL HAZARD
The machine must be earthed (grounded).

ELECTRICAL HAZARD
Make sure that the actual electrical power supply voltage corresponds to the voltage stated on the name plate of the machine.
Incorrect voltage can damage the electrical circuit.

Coolimat-2000 is factory mounted with a 1.8 m / 5.9 ft power cable.

- Mount an approved plug on the cable or hard-wire into the power supply according to electrical specifications of your unit and local regulations:

EU cable		UL cable	
L1	Brown	L1	Black
L2	Black	L2	Red
L3	Black or grey	L3	Orange
Earth	Green/yellow	Earth	Green/yellow
Neutral	Blue (not used)	Neutral	White (not used)

5.5.4 Verify correct installation

1. The fan beneath the intake cover must rotate clockwise.
2. If the fan rotates counter-clockwise, switch 2 of the phases.

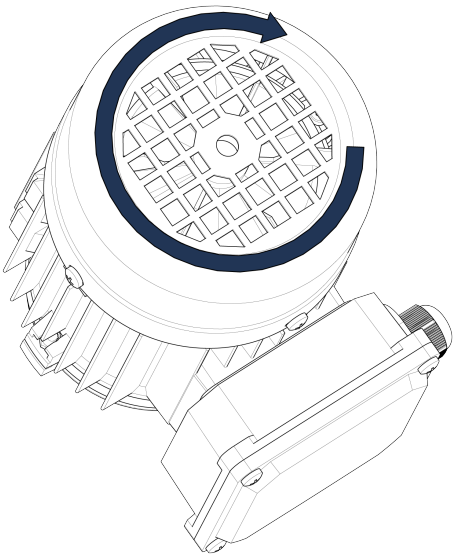

5.6 Connect Coolimat-2000 to the cutting machine

The recirculation pump is controlled by the cutting machine.

Water is directed from the cutting machine to Coolimat-2000 via the water-outlet pipe supplied with the cutting machine.

On the large floor-type cutting machines of Struers the pipes is rigid. A drain angle is supplied with which the outlet pipe fits into the water inlet duct on the filter unit cover.

1. Connect the 24 V / CAN control cable to the Coolimat-2000 control unit by plugging one end into the machine's control socket (see machine manual for details) and the other end into the socket on the rear panel of the Coolimat-2000 control unit.
2. Connect one end of the Coolimat-2000 water hose to the quick coupling on the pump, and connect the other end to the water inlet of the cutting machine.
3. Mount the drain angle to the water outlet from the cutting machine.

5.7 Noise level

CAUTION
Prolonged exposure to loud noises may cause permanent damage to a person's hearing.
Use hearing protection if the exposure to noise exceeds the levels set by local regulations.

For information on the sound pressure level value, see .

6 Operate the device

6.1 Start Coolimat-2000

Coolimat-2000 starts automatically when the cutting machine starts to cut. Coolimat-2000 enters the standby mode when it stops cutting.

1. Turn the main switch on.
2. Check that the power LED is green. If it is not, press **Resume**.

Note
Be aware of possible exothermic reactions dependent on the combination of the metallic swarf produced during cutting. For further information, see Disposal ► 27.

6.2 Power off

To disconnect the power supply to Coolimat-2000:

- Turn the main switch off.

6.3 Replace the filter tube of the static filter

1. Turn the main switch off.
2. Wait for 10 seconds.
3. Remove the filter tube from the tank.
4. Mount a new filter tube on the tank.
5. Turn the main switch on.
6. Press **Resume** to activate Coolimat-2000.

Note
The filled filter tube is classified as metal waste.

7 Maintenance and service

Proper maintenance is required to achieve the maximum up-time and operating lifetime of the machine. Maintenance is important in ensuring continued safe operation of your machine.

The maintenance procedures described in this section must be carried out by skilled or trained personnel.

Safety Related Parts of the Control System (SRP/CS)

For specific safety related parts, see the section "Safety Related Parts of the Control System (SRP/CS)" in the section "Technical data" in this manual.

Technical questions and spare parts

If you have technical questions or when you order spare parts, state serial number and voltage/frequency. The serial number and the voltage are stated on the name plate of the machine.

To ensure a longer lifetime for your machine, we strongly recommend regular cleaning.

WARNING
Disconnect the power before performing any maintenance work.

CAUTION
Wear gloves and safety goggles when you handle coolant.

CAUTION
Wear safety shoes when you handle the pump.

CAUTION
Take care, the coolant may be hot.

CAUTION
The filter tube is heavy when full and should not be handled without assistance. If possible, leave it to dry out over night.

Note
Accumulated dirt and swarf can restrict or cause damage to the water inlet valves.

7.1 Daily

7.1.1 The coolant

The coolant level

During use, the coolant evaporates, and the level in the tank is reduced over time. Therefore, the operator must refill periodically.

- The coolant level must be approximately 25 mm / 0.98" below the upper edge of the tank (follow the marking on the floater).

The coolant mix

In order for the coolant to function as intended, always maintain a constant mix of additive and coolant.

Remember to add Struers Additive, Cooli Additive or Cooli Additive Plus.

To check the concentration of additive, use a refractometer.

Mixing ratio:

- One part of Additive for 25 parts of water.
- Concentration = 1.9 x Brix value.
- The concentration of additive should always be 4%.

Add Cooli Additive or Cooli Additive Plus if the concentration is too low.

Always follow the information on the coolant additive.

Hint
We recommend the use of Struers Additive, Cooli Additive or Cooli Additive Plus to minimize foam generation in the coolant.

7.1.2 Check the coolant

1. Check, and if necessary, replace the coolant. See Replace the coolant ► 25.
2. Top up with coolant if required. See The coolant ► 24.

Note
Replace the coolant immediately if you notice that it is infected by algae or bacteria.
Flush the tank and tubes with a suitable antibacterial disinfectant, e.g. Struers Unitclean.

3. Check and if necessary, replace the Filter Tube. See Replace the filter tube of the static filter ► 22.

7.1.3 Replace the coolant

CAUTION
Avoid spilling coolant when you fill, empty or top up the tank.

CAUTION
Wear working shoes with slip-resistant soles.

Empty the cooling unit tank

Note
The coolant contains additive and cutting swarf and may not be disposed of into a main drain.
The coolant must be disposed of in compliance with local safety regulations.
See Disposal ► 27.

Note
Do not leave equipment unsupervised when you empty the cooling unit tank.

If you use the recirculation pump

1. Disconnect the cooling unit's water outlet hose from the quick coupling on the cutting machine.
2. Place the open end of the hose in a suitable container.
3. Start the recirculation pump by activating the flushing gun on the cutting machine.
4. Turn off Coolimat-2000 on the main switch when the tank is

empty.

If you use an industrial dredge pump

1. Place the open end of the hose in a suitable container.
2. Empty the cooling unit completely, and clean out all water and debris from the tank.
3. Clean the tank and connected tubes thoroughly.

Refill the cooling unit tank

Empty any debris that may be left in the tank before refilling it.

Refer to Fill the tank ► 19.

Note
Remember to add Struers Additive each time you refill with water.

Note
Always maintain the correct concentration of Struers Additive, Cooli Additive or Cooli Additive Plus in the coolant (percentage stated on the container of the additive).

7.2 Weekly

- Clean all surfaces that are in contact with the filter tube.

7.3 Monthly

- Clean all surfaces with a damp cloth.

7.4 Annually

7.4.1 Test the safety devices

WARNING
Do not use the machine with defective safety devices. Contact Struers Service.

Only skilled or trained personnel may carry out the safety test.

Test 1

1. Start a cutting process. Both the cutting machine and Coolimat-2000 start.
2. Activate the emergency stop on the cutting machine.

   – The filter pump stops.
   – The cutting machine stops.
   If not, turn Coolimat-2000 off on the main switch and contact Struers Service.

Test 2

1. Start a cutting process. Both the cutting machine and Coolimat-2000 start.
2. Activate the emergency stop on Coolimat-2000.

   – The filter pump stops.
   If not, turn off the machine on the main switch and contact Struers Service.

7.5 Spare parts

For specific safety related parts, see the section "Safety Related Parts of the Control System (SRP/CS)" in the section "Technical data" in this manual.

Technical questions and spare parts

If you have technical questions or when you order spare parts, state the serial number and the year of production. This information is stated in the name plate on the machine.

For further information, or to check the availability of spare parts, contact Struers Service. Contact information is available on Struers.com.

7.5.1 Spare parts list

The following is a list of selected wear parts that may need replacement during the lifetime of the machine.

For further information, or to check the availability of other replacement parts, contact your local Struers Service department. Contact information is available on The Struers Website (http://www.struers.com).

Spare part	Struers catalog no.
Wheel Swivel Ø65 mm/2.6"), 2 pcs.	RGB00120

7.6 Service and repair

We recommend that a regular service check be carried out yearly or after every 1500 hours of use.

When the machine is started up, the display shows information about total operation time and the machines service information.

After 1500 hours of operation time, the display will show a message reminding the user that a service check should be scheduled.

Note
Service must only be performed by a qualified technician (electromechanical, electronic, mechanical, pneumatic, etc.).
Contact Struers Service.

7.7 Disposal

Equipment marked with a WEEE symbol contains electrical and electronic components and must not be disposed of as general waste.

Contact your local authorities for information on the correct method of disposal in accordance with national legislation.

For disposal of consumables and recirculation fluid, follow local regulations.

WARNING
In case of fire, alert bystanders, the fire brigade and cut power. Use a powder fire extinguisher. Do not use water.

Note
The recirculation fluid will contain additive and cutting or grinding swarf.
Do not dispose of the recirculation fluid into a main drain.
Follow the current safety regulations for handling and disposal of swarf and additive for recirculation fluid.

Keep track of which metals you cut or grind and the amount of swarf produced.

Depending on which metals you cut or grind, it is possible that the combination of the metallic swarf from metals with a large difference in electropositivity, can result in exothermic reactions when favorable conditions are present.

Examples:

The following are examples of combinations which can result in exothermic reactions if a large amount of swarf is produced during cutting or grinding on the same machine, and when favorable conditions are present:

- Aluminum and copper.
- Zinc and copper.

8 Troubleshooting

Error	Cause	Action
Water leakage.	A leak in the cooling unit water hose.	Check the hose for leakages and tighten the hose clamp.
	The drain from the cutting machine is blocked with debris.	Check and clean the drain and tubes.
	Water overflow in the water tank	Remove the excess water in the tank
The cooling unit has stopped and cannot be restarted	Blown fuses	Contact Struers Service.
Corrosion of specimens, cooling unit or equipment	Insufficient additive for coolant.	Add coolant additive in the correct concentration to the coolant. Check with a refractometer. Follow the instructions in The coolant ► 24.
The pump has stopped	Emergency stop on the cutting machine has been activated. This will stop the pump.	Release the Emergency stop. Pressing the Emergency stop button on Coolimat-2000 will not stop the cutting machine.

Error	Cause	Action
The water level rises in the machine.	When the filter tube is saturated with swarf or does not filter correctly, the water level in the machine will rise and overflow.	Replace the filter tube. Check that a suitable, compliant filter material is used (we recommend Struers Filter Tubes).
No or low flow of coolant in the cutting machine.	The direction of the pump is incorrect.	Switch 2 of the phases. See Verify correct installation ► 21.
	The water inlet to the cutting machine is blocked.	Check the water inlet hose for blockages. For cutting machines with an inline filter, see the Instruction Manual for the machine.

9 Technical data

9.1 Technical data sheet

Pump	Flow	65 l/min (17 gallons/min) at 1 bar mm (14.5 psi)
	Nominal power	0.75 kW (1 hp)
	Water outlet	GEKO 3/4"
Safety standards		See the Declaration of Conformity
Operating environment	Surrounding temperature	5 - 40°C (41 - 104°F)
	Humidity	< 85% RH non-condensing
Storage and transport conditions	Surrounding temperature	0 - 60°C (21 - 140°F)
	Humidity	< 85% RH non-condensing

Power supply 1	Voltage/frequency	3 x 200 V (50 Hz)
	Power inlet	3L + (N) + PE
	Current, nominal load (1 Pump / Static filter)	3.7 A / 8.7 A
	Current, max. (1 Pump / Static filter)	7.5 A / 17.4
	Ampere rating of the largest motor or load (1 Pump / Static filter)	3.7 A / 3.7 A
Power supply 2	Voltage/frequency	3 x 200-210 V (60 Hz)
	Power inlet	3L + (N) + PE
	Current, nominal load (1 Pump / Static filter)	3.8 A / 8.8 A
	Current, max. (1 Pump / Static filter)	7.6 A / 17.6
	Ampere rating of the largest motor or load (1 Pump / Static filter)	3.8 A / 3.8 A

Power supply 3	Voltage/frequency	3 x 220-240 V (60 Hz)
	Power inlet	3L + (N) + PE
	Current, nominal load (1 Pump / Static filter)	3.3 A / 7.8 A
	Current, max. (1 Pump / Static filter)	6.6 A / 15.6
	Ampere rating of the largest motor or load (1 Pump / Static filter)	3.3 A / 3.3 A
Power supply 4	Voltage/frequency	3 x 380-415 V (50 Hz)
	Power inlet	3L + (N) + PE
	Current, nominal load (1 Pump / Static filter)	1.9 A / 4.3 A
	Current, max. (1 Pump / Static filter)	3.7 A / 8.6
	Ampere rating of the largest motor or load (1 Pump / Static filter)	1.9 A / 1.9 A

Power supply 5	Voltage/frequency	3 x 460-480 V (60 Hz)
	Power inlet	3L + (N) + PE
	Current, nominal load (1 Pump / Static filter)	1.7 A / 3.9 A
	Current, max. (1 Pump / Static filter)	3.3 A / 7.7 A
	Ampere rating of the largest motor or load (1 Pump / Static filter)	1.7 A / 1.7 A
Safety Circuit Performance Level	Emergency stop, Pump 1	PL c
	Emergency stop, Pump 2	PL c
	Emergency stop, Winding	PL c
	Emergency stop from main machine, Pump 1, Schlegel E-stop	PL c
	Emergency stop from main machine, Pump 2, Schlegel E-stop	PL c
	Emergency stop from main machine, Pump 1, Omron E-stop	PL c
	Emergency stop from main machine, Pump 2, Omron E-stop	PL c

Noise level	A-weighted sound emission pressure level at workstations	LpA = 65.5 dB(A) (measured value). Uncertainty K = 4 dB (In combination with Magnutom-5000 cutting an Aluminium alloy rod Ø110 mm)
Dimensions and weight (Tank itself)	Width	80 cm (31")
	Depth	140 cm (55")
	Height	27.5 cm (10.8")
	Volume	200 l (52.8 gallons)
	Weight	48 kg (105.8 lbs)
Dimensions and weight (Pump itself)	Width	22 cm (8.7")
	Depth	22 cm (8.7")
	Height	52 cm (20.5")
	Weight	10 kg (22 lbs)
Dimensions and weight (Static filter with tank and pump)	Width	83 cm (32.7")
	Depth	140 cm (55")
	Height	71 cm (27.9")
	Weight	88 kg (194 lbs)

9.2 Safety Related Parts of the Control System (SRP/CS)

WARNING
Safety critical components must be replaced after a maximum lifetime of 20 years. Contact Struers Service for information.

Note
Replacement of safety critical components must only be performed by a Struers engineer or a qualified technician (electromechanical, electronic, mechanical, pneumatic, etc.).
Safety critical components must only be replaced by components with at least the same safety level.
Contact Struers Service.

Hint
SRP/CS (safety-related parts of a control system) are parts that have an influence on safe operation of the machine.

Safety- related part	Manufacturer/Manufacturer description	Manufacturer catalog no.	Electrical ref.	Struers catalog no.
Emergency stop	Schlegel	Rondex RV dia. 22	S1	2SA10400
Emergency stop	Schlegel	Module holder MHR-5	S1	2SA41605
Emergency stop	Schlegel	MTO NC switch	S1.2, S1.3, S1.4, S1.5	2SB10071
Motor contactor	ABB	AF09Z-30-10-21	K6, K7	2KM11310
Motor contactor	Omron	J7KNA-12-10-24VD-VS	K4, K5	2KM70911

9.3 Diagrams

Note
If you want to view specific information in detail, see the online version of this manual.

9.3.1 Circuit diagram

See the diagram number on the name plate of the equipment, and contact Struers Service via Struers.com.

9.3.2 Block diagram – 16523051 A

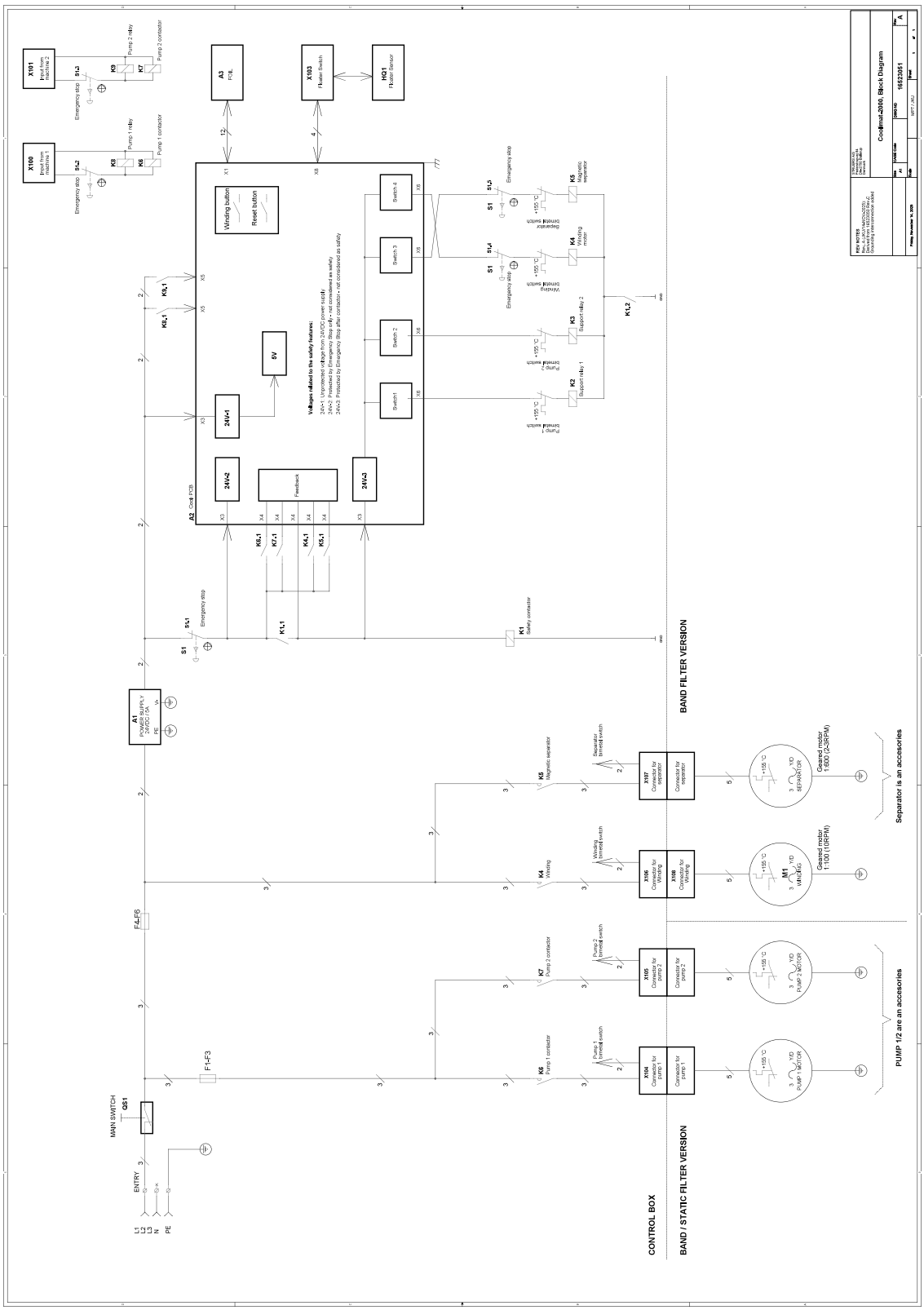

9.4 Legal and regulatory information

FCC notice

This equipment has been tested and found to comply with the limits for a Class B digital device, pursuant to part 15 of the FCC Rules. These limits are designed to provide reasonable protection against harmful interference in a residential installation. This equipment generates, uses and can radiate radio frequency energy and, if not installed and used in accordance with the instructions, may cause harmful interference to radio communications. However, there is no guarantee that interference will not occur in a particular installation. If this equipment does cause harmful interference to radio or television reception, which can be determined by turning the equipment off and on, the user is encouraged to try to correct the interference by one or more of the following measures:

- Reorient or relocate the receiving antenna.
- Increase the separation between the equipment and receiver.
- Connect the equipment into an outlet on a circuit different from that to which the receiver is connected.

Pursuant to Part 15.21 of the FCC Rules, any changes or modifications to this product not expressly approved by Struers ApS could cause harmful radio interference and void the user's authority to operate the equipment.

EN ISO 13849-1:2015

All SRP/CS are limited to a lifetime of 20 years. After expiration of this period, all components must be replaced.

10 Manufacturer

Struers ApS
Pederstrupvej 84
DK-2750 Ballerup, Denmark
Telephone: +45 44 600 800
Fax: +45 44 600 801
www.struers.com

Responsibility of the manufacturer

The following restrictions should be observed, as violation of the restrictions may cause cancellation of Struers legal obligations.

The manufacturer assumes no responsibility for errors in the text and/or illustrations in this manual. The information in this manual is subject to change without notice. The manual may mention accessories or parts not included in the supplied version of the equipment.

The manufacturer is to be considered responsible for effects on safety, reliability, and performance of the equipment only if the equipment is used, serviced, and maintained in accordance with the instructions for use.

Based on: 16527901 E

Declaration of Incorporation of Partly Completed Machinery

Manufacturer	Struers ApS • Pederstrupvej 84 • DK-2750 Ballerup • Denmark
Name	Coolimat-2000 Band Filter Coolimat-2000 Static Filter
Model	N/A
Function	Recirculation cooling unit
Type	0652
Cat. no.	06526129, 06526130, 06526136 06526146, 06526229, 06526230, 06526236, 06526246, 06526254

The above listed machinery is only intended to be used with Struers machinery and consumables, and shall not be put into service until the final machinery into which it is to be incorporated has been declared in conformity with this regulation, where appropriate.

Serial no.

CE Module H, according to global approach **EU**

We declare that the product mentioned is in conformity with the following legislation, directives and standards:

2006/42/EC	EN ISO 12100:2010, EN ISO 13849-2:2012, EN ISO 13849-1:2015, EN ISO 13850:2015, EN 60204-1:2018, EN 60204-1-2018/Corr.:2020
2011/65/EU	EN 63000:2018
2014/30/EU	EN 61000-6-2:2005/Corr.:2005, EN 61000-6-2:2005, EN 61000-6-3:2007, EN 61000-6-3-A1:2011, EN 61000-6-3-A1-AC:2012, EN 61000-3-3:2013, EN 61000-3-2:2014
Additional standards	NFPA 79, FCC 47 CFR Part 15 Subpart B

Authorized to compile technical file/
Authorized signatory

Date: [Release date]

Struers
Ensuring Certainty

en	For translations see
bg	За преводи вижте
cs	Překlady viz
da	Se oversættelser på
de	Übersetzungen finden Sie unter
el	Για μεταφράσεις, ανατρέξτε στη διεύθυνση
es	Para ver las traducciones consulte
et	Tõlked leiate aadressilt
fi	Katso käännökset osoitteesta
fr	Pour les traductions, voir
hr	Za prijevode idite na
hu	A fordítások itt érhetők el
it	Per le traduzioni consultare
ja	翻訳については、
lt	Vertimai patalpinti
lv	Tulkojumus skatīt
nl	Voor vertalingen zie
no	For oversettelser se
pl	Aby znaleźć tłumaczenia, sprawdź
pt	Consulte as traduções disponíveis em
ro	Pentru traduceri, consultați
se	För översättningar besök
sk	Preklady sú dostupné na stránke
sl	Za prevode si oglejte
tr	Çeviriler için bkz
zh	翻译见

www.struers.com/Library