Struers
Ensuring Certainty

CitoDoser

Instruction Manual

Original Instructions

Doc. no.: 15797025-01_C-en
Date of release: 2025.08.21

Copyright

The contents of this manual are the property of Struers ApS. Reproduction of any part of this manual without the written permission of Struers ApS is not allowed.

All rights reserved. © Struers ApS.

Table of Contents

1 About this manual **5**

2 Safety **5**

2.1 Intended use - CitoDoser 5

2.2 CitoDoser safety precautions 6

2.2.1 Read carefully before use 6

2.3 Safety messages 6

2.4 Safety messages in this manual 7

3 Get started – introduction **7**

3.1 Device description 7

3.2 Overview – CitoDoser 8

3.3 Struers knowledge 8

3.4 Consumables 8

4 Installation **9**

4.1 Unpack the doser 9

4.2 Check the packing list 9

4.3 Power supply 9

4.4 Install CitoDoser 9

5 Transport and storage **12**

6 Basic operation **13**

6.1 Pour resin over the sample using the dosing unit 13

6.2 CitoDoser association 14

6.2.1 Create a CitoDoser association 14

6.2.2 Delete a CitoDoser association 15

7 Maintenance and service **17**

7.1 Daily 17

7.1.1 Inspection and cleaning 17

7.1.2 Empty the CitoDoser 17

7.1.3 Clean the CitoDoser 18

8 Spare parts **20**
9 Service and repair **20**
10 Disposal **21**
11 Legal and regulatory information **21**
12 Manufacturer **21**
13 Technical data sheet **22**
Declaration of Incorporation of Partly Completed Machinery **25**

1 About this manual

CAUTION
Struers equipment must only be used in connection with and as described in the Instruction Manual supplied with the equipment.

Note
Read the Instruction Manual carefully before use.

Note
If you want to view specific information in detail, see the online version of this manual.

2 Safety

2.1 Intended use - CitoDoser

For professional materialographic hot mounting of materials for further materialographic inspection and only tobe operated by skilled/trained personnel.

The machine is only designed to be used with Struers CitoPress-15 and CitoPress-30. The machine is only designed to be used with Struers consumables specially designed for this purpose and this type of machine.

The machine is for use in a professional working environment (e.g. a materialographic laboratory).

Do not use the machine for:	Hot mounting of materials other than solid materials suitable for materialographic studies. The machine must not be used for any type of explosive and/or flammable material, or materials that are not stable during heating or pressure.
Model:	CitoDoser

2.2 CitoDoser safety precautions

2.2.1 Read carefully before use

1. Ignoring this information and mishandling of the equipment can lead to severe bodily injuries and material damage.
2. The machine must be installed in compliance with local safety regulations. All functions on the machine and any connected equipment must be in working order.
3. The operator(s) must read the safety and user instruction sections of this manual and the CitoPress Instruction Manual. The operator(s) must read the User Guides and, where applicable, Safety Data Sheets for the applied consumables.
4. The machine is to be operated and maintained by by skilled/trained personnel only.
5. The machine must be placed on a CitoPress hot-mounting press.
6. Remove CitoDoser from CitoPress prior to any service.
7. In case of fire, alert bystanders, the fire brigade and cut power. Use a powder fire extinguisher. Do not use water.
8. Struers equipment must only be used in connection with and as described in the Instruction Manual supplied with the equipment.
9. The machine is designed to be used only with Struers consumables specifically designed for this purpose and this type of machine.
10. If the equipment is subjected to misuse, incorrect installation, alteration, neglect, accident or incorrect repair, Struers will accept no responsibility for damage to the user or the equipment.
11. Dismantling of any part of the equipment, during service or repair, should always be performed by a qualified technician (electromechanical, electronic, mechanical, pneumatic, etc.)

2.3 Safety messages

Struers uses the following signs to indicate potential hazards.

ELECTRICAL HAZARD
This sign indicates an electrical hazard which, if not avoided, will result in death, or serious injury.

WARNING
This sign indicates a hazard with a medium level of risk which, if not avoided, could result in death, or serious injury.

CAUTION
This sign indicates a hazard with a low level of risk which, if not avoided, could result in minor, or moderate injury.

General messages

Note
This sign indicates that there is a risk of damage to property, or a need to proceed with special care.

Hint
This sign indicates that additional information and hints are available.

2.4 Safety messages in this manual

CAUTION
Struers equipment must only be used in connection with and as described in the Instruction Manual supplied with the equipment.

ELECTRICAL HAZARD
Disconnect the machine from the electrical power supply while you install the dosing unit.
Installation of CitoDoser must be carried out by skilled or instructed persons.

ELECTRICAL HAZARD
Disconnect CitoPress from the electrical power supply and water supply before you remove CitoDoser.

WARNING
Check that the protective grid in CitoDoser is intact and that it is not possible to come into contact with the agitator wheel when it is rotating.

3 Get started – introduction

3.1 Device description

CitoDoser is an automatic resin doser used with Struers CitoPress-15 and CitoPress-30.

CitoDoser automatically doses the correct amount of resin, depending on the cylinder size and the method chosen. Resin dosing is simplified and the formation of airborne dust is reduced.

CitoDoser consists of 1 base unit, mounted on the CitoPress machine and a CitoDoser dosing unit. Multiple dosing units can be acquired to contain the different types of resin used.

CitoDoser can only be used with Struers CitoPress-15 or CitoPress-30.

3.2 Overview – CitoDoser

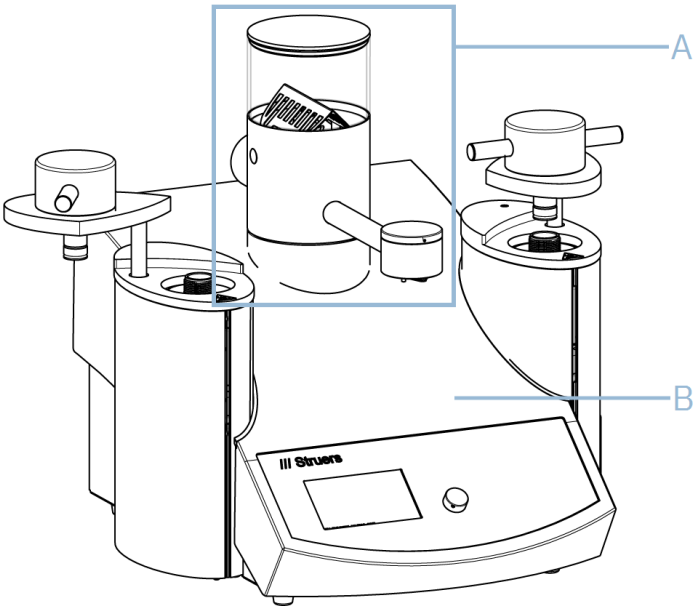

A CitoDoser

B CitoPress

3.3 Struers knowledge

Materialographic mounting can be regarded as a helping process assisting the mechanical preparation process as well as the final test.

Understanding the different characteristics of mounting materials and being able to evaluate the need for mounting is the key to have specimens that are easy to handle and clean and gives a good image of a coating or an edge.

Hint
For further information, see the section on Mounting on the Struers website.

3.4 Consumables

Together with the CitoPress machine, CitoDoser is designed to be used only with Struers consumables specifically designed for this purpose and this type of machine.

Other products may contain aggressive solvents, which dissolve e.g. rubber seals. The warranty may not cover damaged machine parts (e.g. seals and tubes), where the damage can be directly related to the use of consumables not supplied by Struers.

For information about the available range, see: The Struers Website (http://www.struers.com).

4 Installation

4.1 Unpack the doser

Note
We recommend that you keep all original packaging and fittings for future use.

4.2 Check the packing list

The packing box contains the following items:

CitoDoser

Pcs.	Description
1	CitoDoser
1	Instruction Manual set

CitoDoser Base

Pcs.	Description
1	CitoDoser Base unit

4.3 Power supply

Power is supplied from the CitoPress machine. See the Instruction Manual for this.

4.4 Install CitoDoser

Install the base plate

ELECTRICAL HAZARD
Disconnect the machine from the electrical power supply while you install the dosing unit.
Installation of CitoDoser must be carried out by skilled or instructed persons.

1. Use a screwdriver or similar tool to carefully remove the plastic cap covering the CitoDoser mounting point (A).

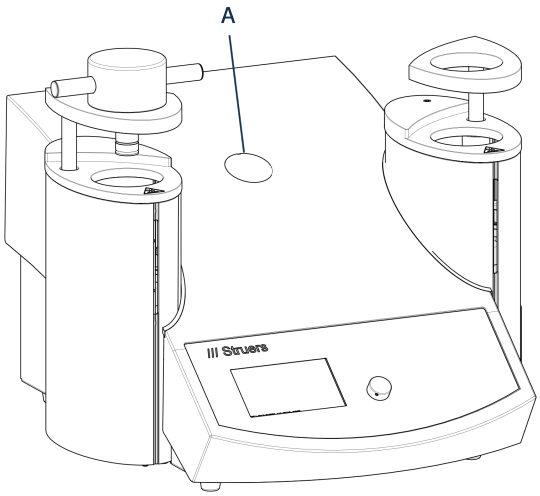

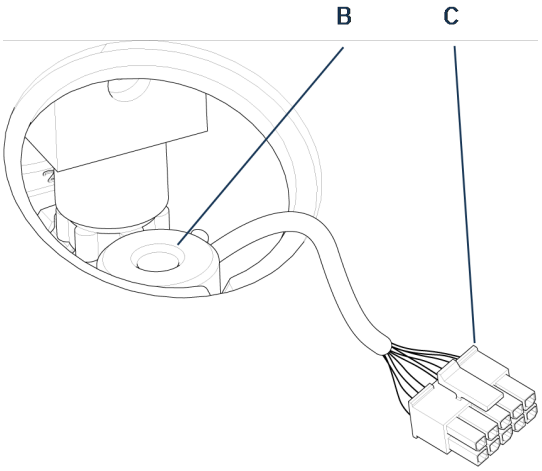

A CitoDoser mounting point

B Shaft

C Plug

2. Carefully cut the cable tie fixing the cable to the shaft (B) inside the mounting hole.
3. Connect the plug (C) on the end of the cable to the socket on the bottom of the dosing unit base plate (D).

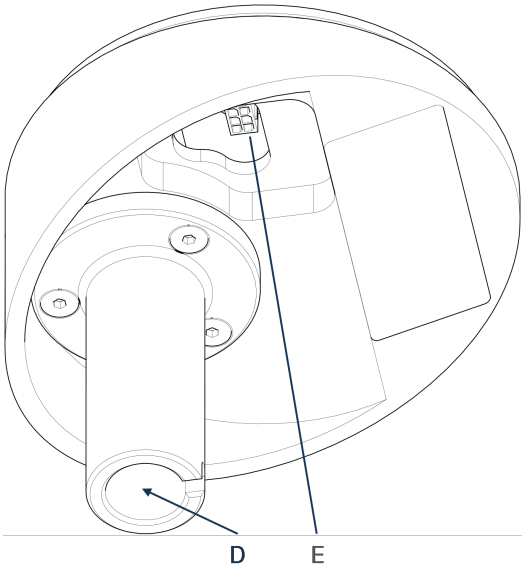

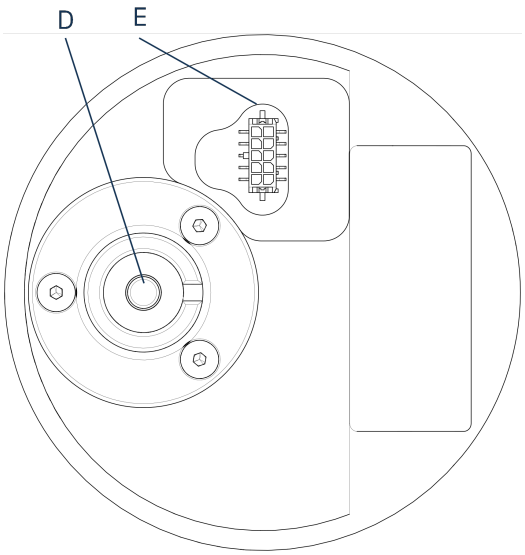

D Base plate

E Bayonet fitting

4. Locate the base unit in the mounting hole by slipping the bayonet fitting (E) over the shaft B: inside the mounting hole.

5. Screw the base plate firmly into position using its Allen bolt (F).

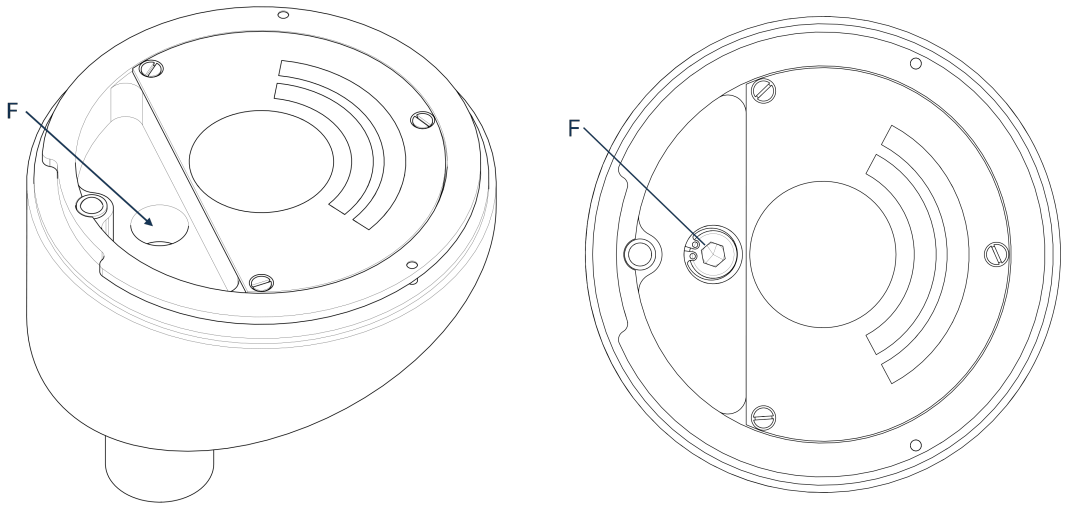

F Allen bolt

Mount the dosing unit

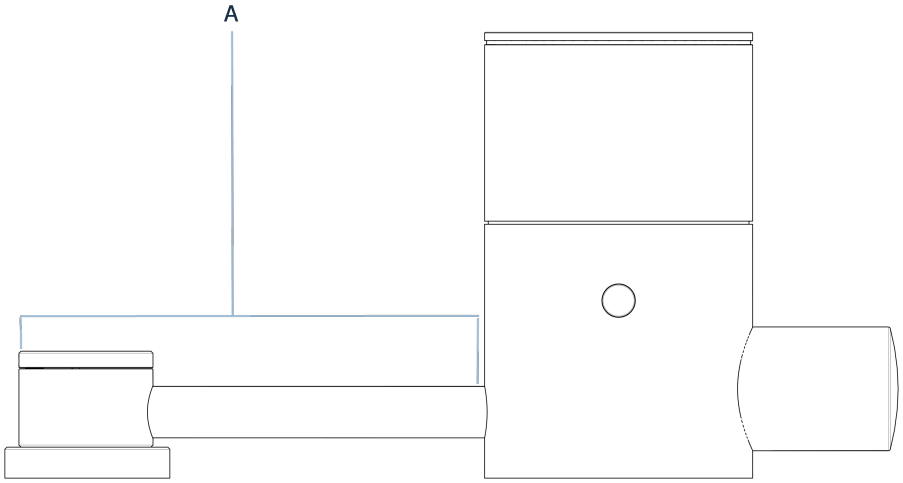

A Spout

1. Hold the unit above the dosing unit base plate with the spout (A) to the front of the machine.
2. Place the rear of the dosing unit, onto the rear of the base plate first.
3. There are 2 location slots on the base plate and dosing unit (front and rear), which must be lined up.

   If necessary, turn the dosing unit slightly to one side until the location slots line up, and the dosing unit is located flat on top of the base unit.
4. Turn the dosing unit to lock it securely onto the base plate.

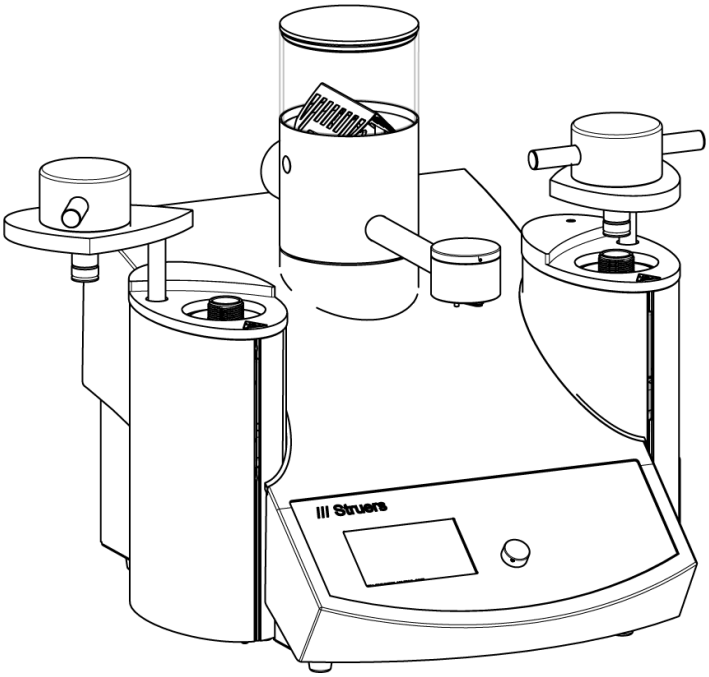

5. Before you use the dosing unit, a method must be associated with the unit. See the Instruction Manual for the CitoPress machine.

Remove the dosing unit

1. With the spout in the centre of the machine, line up the location slots on the dosing unit and base plate.
2. Lift the front (spout end) of the dosing upwards. When the location slots are lined up properly, you can lift the front of the dosing unit clear of the base plate.
3. Then, push the dosing unit slightly backwards while lifting. When the rear location slots are lined, you can lift the dosing unit free of the base plate.

Hint
For information on how to empty and clean the Dosing Unit, see Empty the CitoDoser ►17 and Clean the CitoDoser ►18.

5 Transport and storage

If, at any time after the installation, you have to move the unit or place it in storage, there is a number of guidelines we recommend that you follow.

- Package the unit securely before transportation. Insufficient packaging could cause damage to the unit and will void the warranty. Contact Struers Service.
- We recommend that you use the original packaging and fittings.

ELECTRICAL HAZARD
Disconnect CitoPress from the electrical power supply and water supply before you remove CitoDoser.

- You can transport the シトドーザベース even when it is installed on the CitoPress machine.

Note
Clean and dry CitoDoser before transportation and storage.

If the machine is bound for long-time storage or shipping, follow these additional steps:

1. Wrap the CitoDoser and base unit in plastic sheet (or bag), together with a desiccant (silica gel).
2. Tape the plastic sheet (or bag) closed to keep the CitoDoser and base unit dry.
3. Pack in a cardboard box.

6 Basic operation

For information on operation of CitoPress, refer to the CitoPress Instruction Manual.

6.1 Pour resin over the sample using the dosing unit

1. Press and hold **Down** for a few seconds to lower the ram to its lowest limit.

2. Swivel the CitoDoser dosing unit's outlet spout over the mounting unit.
3. Press the dosing button.

Note
If the lower ram has not been lowered when pressing the dosing button, a warning is displayed.

The dosing unit will automatically dispense the preset amount of resin for the selected method.

Note
For information on further operation of the CitoPress machine, see the Instruction manual for this unit.

6.2 CitoDoser association

6.2.1 Create a CitoDoser association

A dosing unit is able to store information electronically, and this information associates the dosing unit with a specific method stored in the mounting press.

When you use a dosing unit for the first time or if the dosing unit's association has been deleted, the dosing unit must be associated with a method.

This means that you must select a resin, and the method that uses this resin is then associated with CitoDoser.

1. Mount CitoDoser on the CitoPress machine. The Struers resin menu is displayed.

2. Turn the knob to highlight the resin to be associated with CitoDoser.

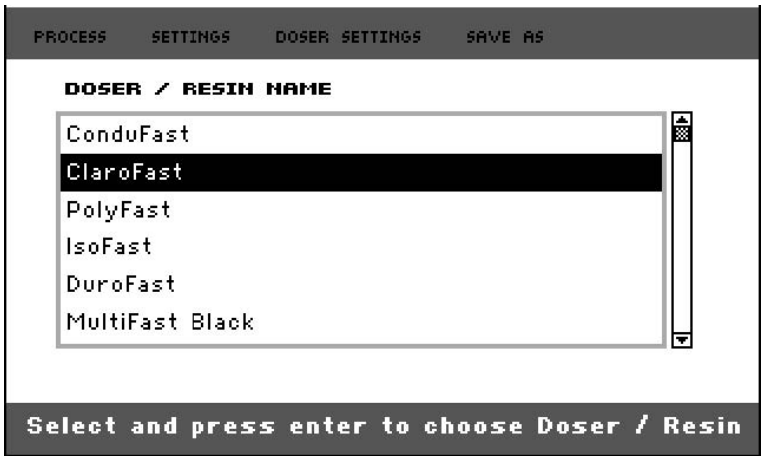

3. Push the knob to select the resin and its method to be associated with CitoDoser.

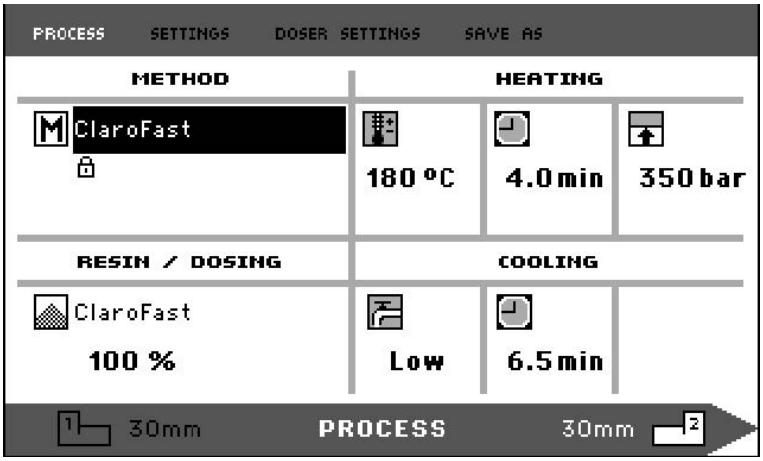

4. Press **Esc** to return to **Process**.

6.2.2 Delete a CitoDoser association

To associate the dosing unit with a different method, the existing association must first be deleted.

1. From **Process**, press **Esc** once to access the top-level menu.

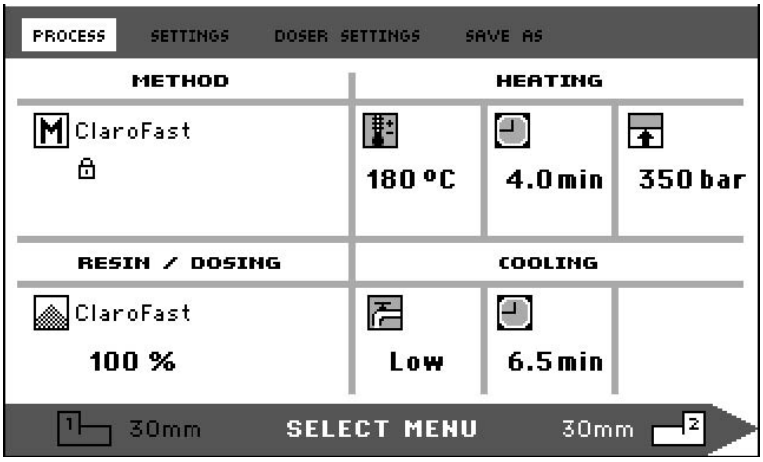

2. Turn the knob to highlight **Doser settings**.

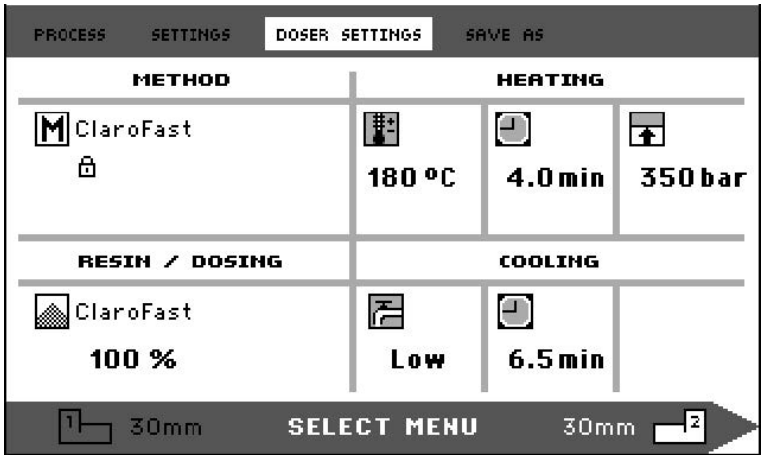

3. Push the knob to open the menu **Doser settings**.

4. The associated resin is highlighted.
5. Push the knob to highlight **Delete** at the bottom of the menu.

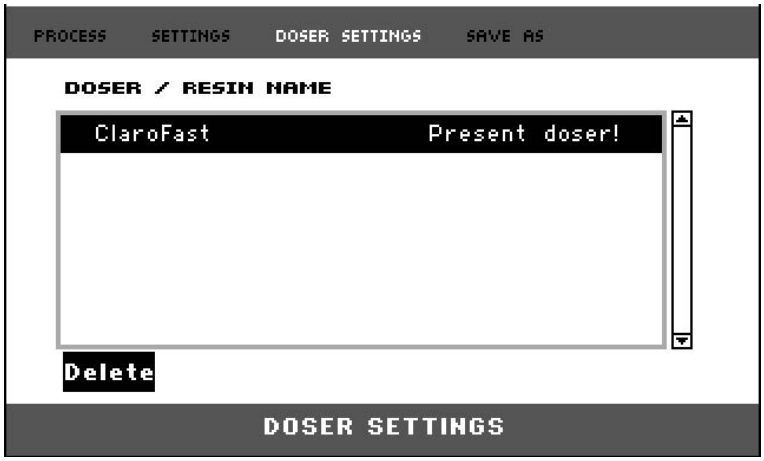

6. Push the knob to delete the resin association.

7 Maintenance and service

Proper maintenance is required to achieve the maximum up-time and operating lifetime of the machine. Maintenance is important in ensuring continued safe operation of your machine.

The maintenance procedures described in this section must be carried out by skilled or trained personnel.

Technical questions and spare parts

If you have technical questions or when you order spare parts, state serial number and voltage/frequency. The serial number and the voltage are stated on the name plate of the machine.

7.1 Daily

7.1.1 Inspection and cleaning

- Clean all accessible surfaces with a soft, damp cloth.

Remove residues

Hint
Do not use a dry cloth as the surfaces are not scratch resistant.
You can remove grease and oil with ethanol or isopropanol.

Note
Never use acetone, benzol or similar solvents.

7.1.2 Empty the CitoDoser

When the optional CitoDoser is fitted to CitoDoser, use the CitoDoser display to empty the dosing unit of resin.

From **Service**, turn the knob to highlight **CitoDoser** .

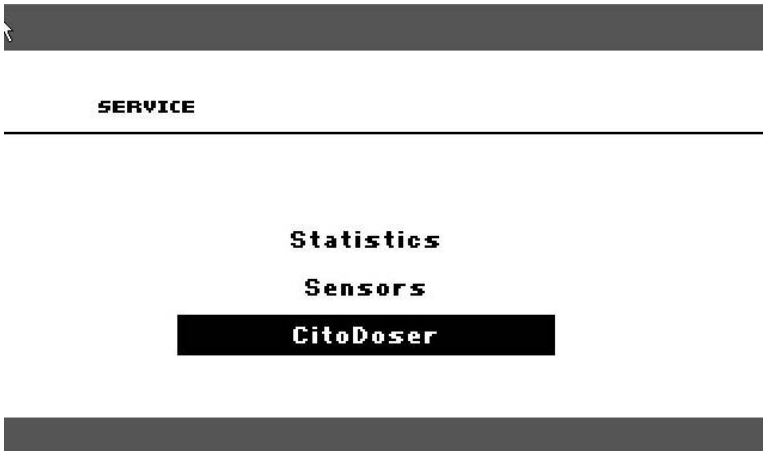

1. Push the knob to enter the **CitoDoser** menu.
2. Turn the knob to highlight **Doser resin feed**.

3. Push the knob to Start/Stop the Doser resin feed.
4. The following warning appears:

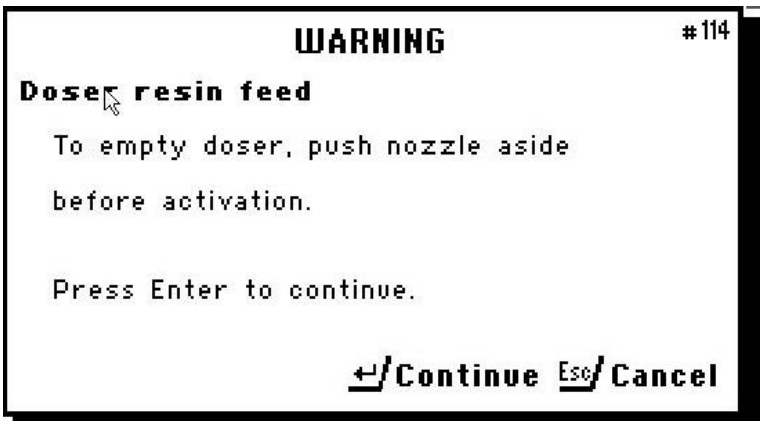

5. Ensure that the nozzle is in a suitable position.
6. Push the knob to empty the CitoDoser.

7.1.3 Clean the CitoDoser

1. Place the CitoDoser on a flat steady surface.
2. Remove the lid (B).

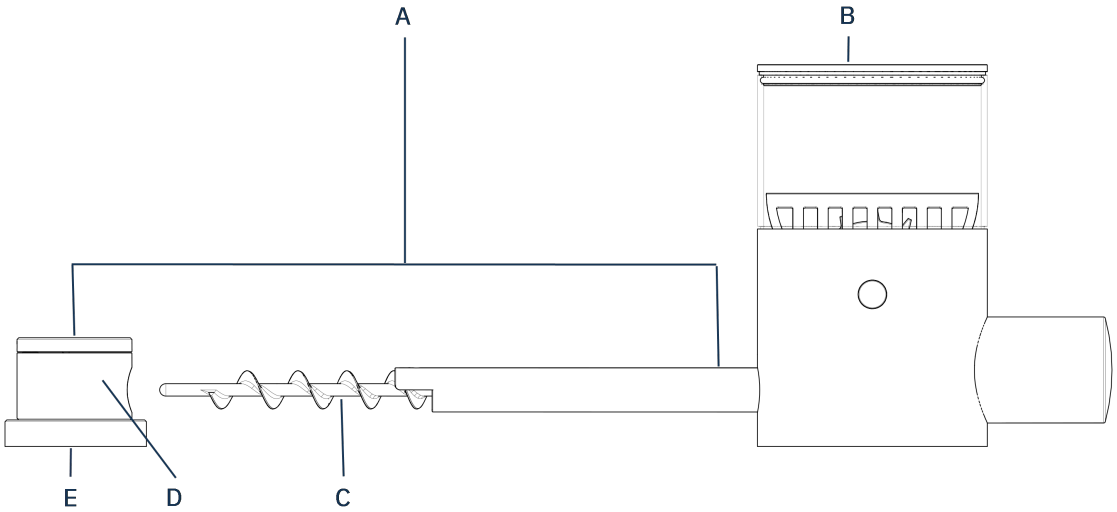

A	Spout	**D**	Nozzle cover
B	Lid	**E**	Screw conveyor
C	Nozzle		

3. Remove the nozzle cover (D) by turning it anti-clockwise and pulling it away from the spout (A).
4. Remove the screw conveyor (E).

   It may be necessary to turn it slightly to disengage it from the drive connection.
5. Clean the inside surfaces using either a vacuum cleaner or a suitable cloth.

Note
Do not use any form of liquid to clean the inside of the CitoDoser. This may result in damage to the doser.

Loosen the agitator wheel

WARNING
Check that the protective grid in CitoDoser is intact and that it is not possible to come into contact with the agitator wheel when it rotates.

1. If necessary, loosen the agitator wheel by pushing it to each side to eject the O ring bearings and then remove it.
2. Reassemble the CitoDoser in reverse order.

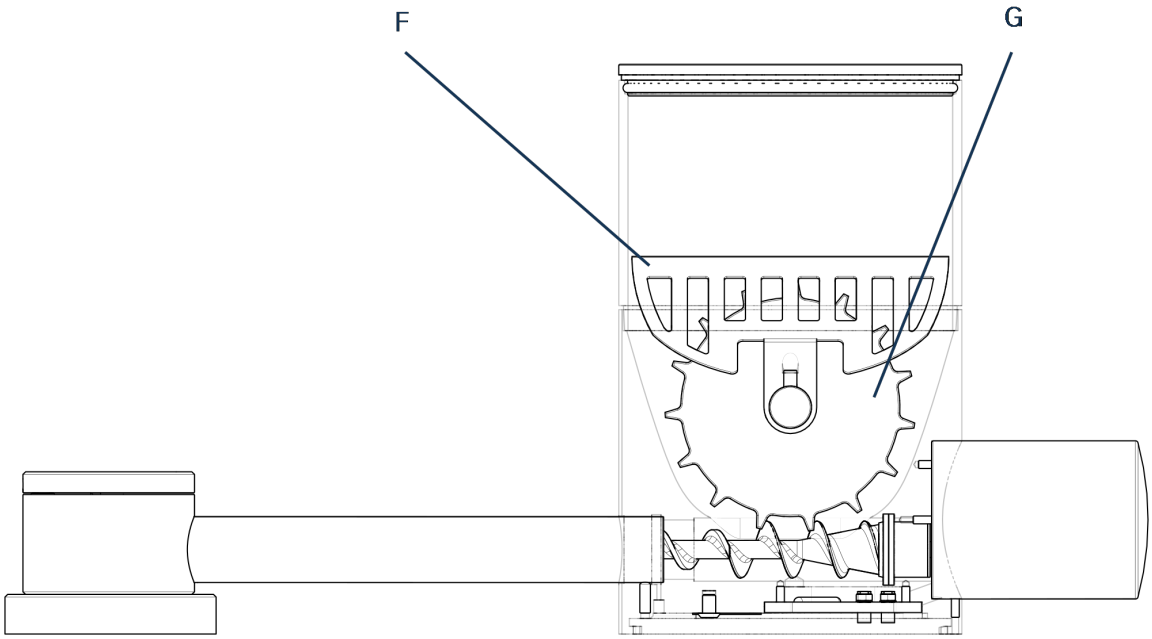

F	Protective grid
G	Agitator wheel

8 Spare parts

For further information, or to check the availability of spare parts, contact Struers Service. Contact information is available on Struers.com.

9 Service and repair

We recommend that a regular service check be carried out yearly or after every 1500 hours of use.

Note
Service must only be performed by a qualified technician (electromechanical, electronic, mechanical, pneumatic, etc.).
Contact Struers Service.

Service check

We offer a range of comprehensive maintenance plans to suit the requirements of our customers. This range of services is called ServiceGuard.

The maintenance plans include equipment inspection, replacement of wear parts, adjustments/calibration for optimal operation, and a final functional test.

10 Disposal

Equipment marked with a WEEE symbol contains electrical and electronic components and must not be disposed of as general waste.

Contact your local authorities for information on the correct method of disposal in accordance with national legislation.

For disposal of consumables and recirculation fluid, follow local regulations.

11 Legal and regulatory information

FCC notice

This equipment has been tested and found to comply with the limits for a Class B digital device, pursuant to part 15 of the FCC Rules. These limits are designed to provide reasonable protection against harmful interference in a residential installation. This equipment generates, uses and can radiate radio frequency energy and, if not installed and used in accordance with the instructions, may cause harmful interference to radio communications. However, there is no guarantee that interference will not occur in a particular installation. If this equipment does cause harmful interference to radio or television reception, which can be determined by turning the equipment off and on, the user is encouraged to try to correct the interference by one or more of the following measures:

- Reorient or relocate the receiving antenna.
- Increase the separation between the equipment and receiver.
- Connect the equipment into an outlet on a circuit different from that to which the receiver is connected.

12 Manufacturer

Struers ApS
Pederstrupvej 84
DK-2750 Ballerup, Denmark
Telephone: +45 44 600 800
Fax: +45 44 600 801
www.struers.com

Responsibility of the manufacturer

The following restrictions should be observed, as violation of the restrictions may cause cancellation of Struers legal obligations.

The manufacturer assumes no responsibility for errors in the text and/or illustrations in this manual. The information in this manual is subject to change without notice. The manual may mention accessories or parts not included in the supplied version of the equipment.

The manufacturer is to be considered responsible for effects on safety, reliability, and performance of the equipment only if the equipment is used, serviced, and maintained in accordance with the instructions for use.

13 Technical data sheet

Mounting specifications		
Mounting Units (optional)	Diameter:	25, 30, 40, 50 mm / 1¼", 1½"
Compression	Mounting pressure:	50-350 bar in steps of 25 bar/725-5076 psi in steps of 363 psi. For 50 mm cylinder in diameter, the max. pressure is limited to 250 bar/3625 psi
Heating (with pressure on)	Temperature:	120, 150, 180℃/248, 302, 356℉
	Time:	Variable between 1 and 15 min
Cooling (with pressure on)	Time:	Variable between 1 and 15 min
	High rate:	Full flow (4.8 L/min)
	Medium rate:	20% of full flow (0.96 L/min)
	Low rate:	3% of full flow (0.14 L/min)
Dosing (based on optional CitoDoser)		20-150%
Physical specifications		
Water supply		Tap water
	Pressure for tap water:	1-6 bar/14.5-87 psi
	Inlet:	¾" dia.
	Outlet:	10 mm dia./0.4”

Power supply	Voltage/frequency:	200-240 V or 50-60 Hz/100-120 V or 50-60 Hz
	Power phases:	1-phase (N+L1+PE) or 2-phase (L1+L2+PE)
	Power consumption:	200-240 V, 50-60 Hz/100-120 V, 50-60 Hz
	Idle:	8 W
	Max (CitoPress-15):	1300 W
	Max (CitoPress-30):	2300 W/1300 W
	Current (CitoPress-15):	5.6 A/13 A
	Current (CitoPress-30):	10 A/13 A
	Residual Current Circuit Breaker (RCCB)	Type A, 30 mA (EN 50178/5.2.11.1) or better is required
Dimensions and weight	Width (CitoPress-15):	480 mm/19"
	Width (CitoPress-30):	550 mm/21.5"
	Depth:	560 mm/22”
	Height (Mounting unit and top closure installed):	450 mm/17.7"
	Height (Including CitoDoser):	550 mm/21.5”
	Weight (CitoPress-15):	34 kg/75 lbs
	Weight (CitoPress-30):	48 kg/106 lbs
	Weight (CitoDoser):	3.1 kg/7 lbs
Standard specifications		
Safety standards		Refer to the Declaration of Conformity
Environmental specifications		

Noise levels	Idle:	0 dB (A)
	A-weighted sound emission pressure level at workstations:	LpA = 61.5 dB(A) (measured value) K = 4 dB(A)
	Measurements made in accordance with EN ISO 11202. The figures quoted are emission levels and are not necessarily safe working levels. While there is a correlation between the emission and exposure levels, this cannot be used reliably to determine whether or not further precautions are required. Factors that influence the actual level of exposure of the workforce include characteristics of the work room, the other sources of noise, etc., i.e. the number of machines and other adjacent processes. Also, the permissible exposure level can vary from country to country. This information, however, will enable the user of the machine to make a better evaluation of the hazard and risk.	
Operating environment	Temperature (operational):	5-40 °C / 41-104 °F
	Humidity:	<85 % RH non-condensing
Storage conditions	Temperature:	25-55°C / -13-131°F
	Humidity:	<95 % RH (non-condensing)
Interface specifications		
Controls		Touch pad, turn/push-knob
LCD display with white LED backlight		5.2"

Based on: 15797901 D

Declaration of Incorporation of Partly Completed Machinery

Manufacturer	Struers ApS • Pederstrupvej 84 • DK-2750 Ballerup • Denmark
Name	CitoDoser CitoDoser Base
Model	N/A
Function	Automatic resin dosing
Type	579
Cat. no.	05796101, 05796102
The above listed machinery is only intended to be used with:	CitoPress-15, CitoPress-30
And shall not be put into service until the final machinery into which it is to be incorporated has been declared in conformity with this regulation, where appropriate.	
Serial no.	

CE Module H, according to global approach **EU**

We declare that the product mentioned is in conformity with the following legislation, directives and standards:

2006/42/EC	EN ISO 12100:2010, EN 60204-1:2018, EN 60204-1-2018/Corr.:2020
2011/65/EU	EN 63000:2018
2014/30/EU	
2014/53/EU	
Additional standards	NFPA 79, FCC 47 CFR Part 15 Subpart B

Authorized to compile technical file/
Authorized signatory

Date: [Release date]

Struers
Ensuring Certainty

en	For translations see
bg	За преводи вижте
cs	Překlady viz
da	Se oversættelser på
de	Übersetzungen finden Sie unter
el	Για μεταφράσεις, ανατρέξτε στη διεύθυνση
es	Para ver las traducciones consulte
et	Tõlked leiate aadressilt
fi	Katso käännökset osoitteesta
fr	Pour les traductions, voir
hr	Za prijevode idite na
hu	A fordítások itt érhetők el
it	Per le traduzioni consultare
ja	翻訳については、
lt	Vertimai patalpinti
lv	Tulkojumus skatīt
nl	Voor vertalingen zie
no	For oversettelser se
pl	Aby znaleźć tłumaczenia, sprawdź
pt	Consulte as traduções disponíveis em
ro	Pentru traduceri, consultați
se	För översättningar besök
sk	Preklady sú dostupné na stránke
sl	Za prevode si oglejte
tr	Çeviriler için bkz
zh	翻译见

www.struers.com/Library