Mounting units

For CitoPress

Instruction Manual

Original Instructions

Doc. no.: 15787025-01_C_en
Date of release: 2025.08.18

Copyright

The contents of this manual are the property of Struers ApS. Reproduction of any part of this manual without the written permission of Struers ApS is not allowed.

All rights reserved. © Struers ApS.

Table of Contents

1 About this manual **5**

2 Safety **5**

2.1 Intended use - Mounting units 5

2.2 Mounting units safety precautions 6

2.2.1 Read carefully before use 6

2.3 Safety messages 7

2.4 Safety messages in this manual 7

3 Get started – introduction **8**

3.1 Device description 8

3.2 Overview 9

4 Installation **10**

4.1 Unpack Mounting units 10

4.2 Check the packing list 10

4.3 Power supply 11

4.4 Install the mounting unit 11

4.5 Replace the lower ram 15

4.6 Remove the mounting unit 17

4.7 Replace the mounting unit 18

4.8 Remove the upper ram 18

5 Transport and storage **19**

6 Basic operation **19**

6.1 Application Guide for Hot Mounting 20

7 Maintenance **20**

7.1 Before each mounting 20

7.1.1 Clean the rams 20

7.2 Daily 20

7.2.1 Inspection and cleaning 20

7.2.2 Lubricate the threads of the top closure 21

7.3 Monthly 21

7.3.1 Clean under the lower ram 21

7.3.2 Check the threads 22

7.3.3 Decalcify the cooling coil 22

7.4 Annually 22

7.4.1 Check the bolts 22

7.4.2 Water couplings 23
8 Spare parts **24**
9 Disposal **24**
10 Technical data sheet **24**
11 Manufacturer **29**
Declaration of Incorporation of Partly Completed Machinery **31**

1 About this manual

CAUTION
Struers equipment must only be used in connection with and as described in the Instruction Manual supplied with the equipment.

Note
Read the Instruction Manual carefully before use.

Note
If you want to view specific information in detail, see the online version of this manual.

2 Safety

2.1 Intended use - Mounting units

For professional materialographic hot mounting of materials for further materialographic inspection. The machine must be operated only by skilled/trained personnel.

The machine is only designed to be used with Struers CitoPress-5, CitoPress-15 or CitoPress-30 machines.

The machine is designed to be used only with Struers consumables specifically designed for this purpose and this type of machine.

The machine is for use in a professional working environment (e.g. a materialographic laboratory).

Do not use the machine for:	Hot mounting of materials other than solid materials suitable for materialographic studies. Any type of explosive and/or flammable material, or materials that are not stable during heating or pressure.
Models:	CitoPress Mounting units Mounting Unit cylinder diameter 1½" Mounting Unit cylinder diameter 1¼ Mounting Unit cylinder diameter 25 mm Mounting Unit cylinder diameter 30 mm Mounting Unit cylinder diameter 40 mm Mounting Unit cylinder diameter 50 mm

2.2 Mounting units safety precautions

2.2.1 Read carefully before use

1. Ignoring this information and mishandling of the equipment can lead to severe bodily injuries and material damage.
2. The machine must be installed in compliance with local safety regulations. All functions on the machine and any connected equipment must be in working order.
3. The operator(s) must read the safety and user instruction sections of this manual and the CitoPress Instruction Manual. The operator(s) must read the User Guides and, where applicable, Safety Data Sheets for the applied consumables.
4. This machine must be operated and maintained only by skilled/trained personnel.
5. The machine must be mounted on a CitoPress Hot Mounting Press.
6. The machine must be disconnected from the electrical power supply before any service.
7. Disconnect the machine from the electrical power supply and water supply before installing or removing the mounting unit.
8. Make sure that the water connections are correctly mounted and without leaks.Turn on the water supply while using the machine.Turn off the water supply if you are going to leave the machine unattended.
9. Make sure that the mounting unit is installed correctly:
   - The arrows must be aligned to lock the mounting unit into position
   - The retaining screw must be tightened
10. Do not operate the mounting press with a higher force/pressure than recommended for the actual cylinder diameter and mounting material in Struers Application Guide for Hot Mounting.
11. Allow the mounting cylinder to cool for at least 2 minutes after a heating cycle before opening.
12. Never leave the machine unattended while a mounting process is running.
13. In case of fire, alert bystanders, the fire brigade and cut power. Use a powder fire extinguisher. Do not use water.
14. Struers equipment must only be used in connection with and as described in the Instruction Manual supplied with the equipment.
15. The machine is designed to be used only with Struers consumables specifically designed for this purpose and this type of machine.
16. If the equipment is subjected to misuse, incorrect installation, alteration, neglect, accident or incorrect repair, Struers will accept no responsibility for damage to the user or the equipment.
17. Dismantling of any part of the equipment, during service or repair, should always be performed by a qualified technician (electromechanical, electronic, mechanical, pneumatic, etc.)

2.3 Safety messages

Struers uses the following signs to indicate potential hazards.

ELECTRICAL HAZARD
This sign indicates an electrical hazard which, if not avoided, will result in death, or serious injury.

CRUSHING HAZARD
This sign indicates a crushing hazard which, if not avoided, could result in minor, moderate, or serious injury.

CAUTION
This sign indicates a hazard with a low level of risk which, if not avoided, could result in minor, or moderate injury.

General messages

Note
This sign indicates that there is a risk of damage to property, or a need to proceed with special care.

Hint
This sign indicates that additional information and hints are available.

2.4 Safety messages in this manual

CAUTION
Struers equipment must only be used in connection with and as described in the Instruction Manual supplied with the equipment.

CAUTION
During operation, the mount and the mounting unit becomes very hot.

CAUTION
During operation, the mounting unit becomes very hot. Make sure that it is cool enough to be handled before you remove it.

ELECTRICAL HAZARD
Disconnect the machine from the electrical power supply and water supply before installing or removing the mounting unit.

ELECTRICAL HAZARD
The mounting unit must only be installed or removed by skilled technicians.

ELECTRICAL HAZARD
Connect the water and electrical connections in the order described. Connecting the water connections before the electrical connections could result in water being leaked into the electrical connections and lead to a short circuit.

CRUSHING HAZARD
Take care of your fingers when handling the machine.
Wear safety shoes when handling heavy machinery.

3 Get started – introduction

3.1 Device description

Struers CitoPress are electro-hydraulic units for hot mounting materialographic specimens with Struers hot mounting materials.

Each mounting unit can be equipped with the different cylinder sizes. Cylinders can easily be exchanged if a different diameter is needed. The required cylinder size will depend on the size of the sample to be mounted.

CitoPress-15/-30 have a built-in Hot Mounting Application Guide that contains all Struers resins.

CitoPress-15/-30 automatically adapt the selected method according to cylinder size and the resin selected.

Option: Customer specific methods can be added and stored in the CitoPress-15/-30.

To operate CitoPress-5, CitoPress-15 and CitoPress-30, the operator raises the ram. The sample is placed onto the ram which is then lowered to its lowest limit. The required mounting material is filled into the cylinder. The top closure is closed, and the mounting process can be started.

When the mounting process is complete, the machine stops automatically.

After the cooling period ends, the top closure can be opened. The ram is raised to its top limit and the mounted specimen removed. The specimen is ready for grinding/polishing.

The machine can be stopped at any time during the mounting process by pressing STOP.

For automatic dosing of resin, a CitoDoser (optional accessory) can be mounted on CitoPress-15 and CitoPress-30.

Struers recommend setting up a local exhaust system to remove dust and fumes from the working area.

Terms used in this manual

"Sample" – refers to the piece of material which is to be mounted.
"Specimen" – refers to the piece of material which has been mounted and is ready for further preparation.

3.2 Overview

Side view

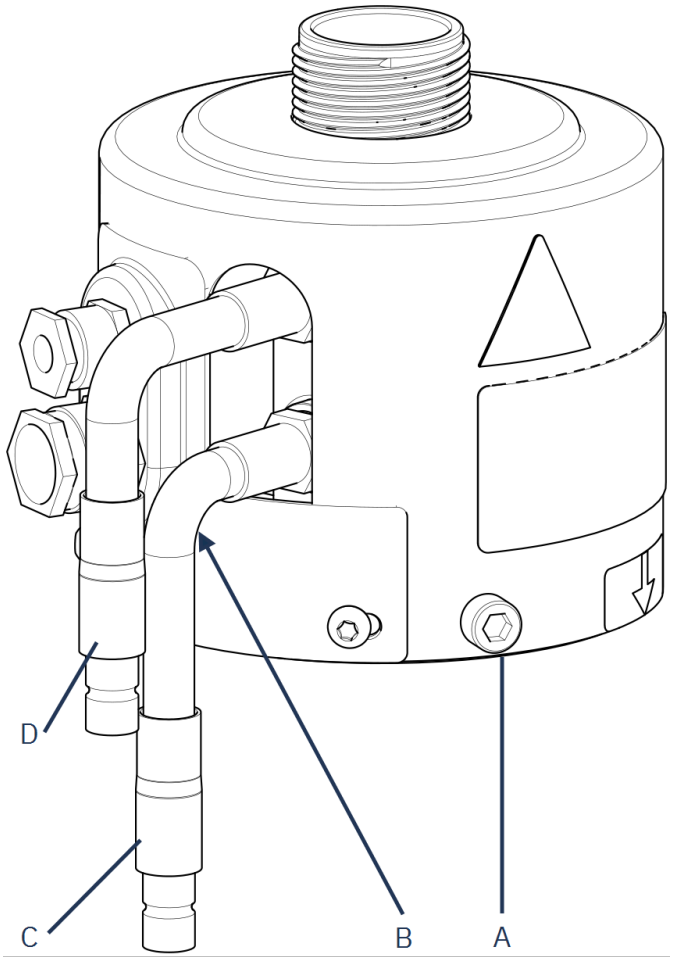

A	Retaining screw	**C**	Outlet connection: male fitting (blue)
B	Hole for retaining screw for 2nd unit (right tower, CitoPress-30 only)	**D**	Inlet connection: male fitting (red)

4 Installation

4.1 Unpack Mounting units

Note
Store the packing box and foam blocks for future use. Failure to use the original packaging and fittings could cause severe damage to the machine and will void the warranty.

4.2 Check the packing list

The packing box contains the following items:

Mounting units

Pcs.	Description
1	Mounting units machine
1	swivel arm
3	power cables
1	pressure hose (water inlet)
1	filter gasket
1	filter gasket reduction ring
1	gasket
1	gasket for reduction ring
3	measuring spoons for mounting material
1	funnel
1	Allen key (2.5 mm)
1	Instruction Manual set

Mounting unit

Pcs.	Description
1	mounting unit
1	top closure with upper ram
1	lower ram
1	piston pin
1	mount release agent, Struers AntiStick
1	scraper

4.3 Power supply

Power is supplied from the CitoPress machine.

4.4 Install the mounting unit

ELECTRICAL HAZARD
Disconnect the machine from the electrical power supply and water supply before installing or removing the mounting unit.

ELECTRICAL HAZARD
The mounting unit must only be installed or removed by skilled technicians.

ELECTRICAL HAZARD
Connect the water and electrical connections in the order described. Connecting the water connections before the electrical connections could result in water being leaked into the electrical connections and lead to a short circuit.

Mounting unit, bottom view

1. Place the mounting unit loosely over the hydraulic cylinder.
2. Rotate the mounting unit to line up the keyhole locking slots with the 4 studs on the hydraulic cylinder.

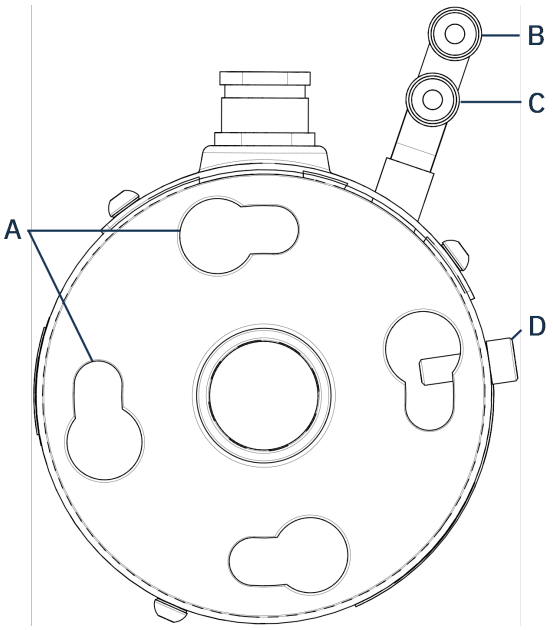

A Keyhole locking slots
B Outlet connection: male fitting (blue)
C Inlet connection: male fitting (red)
D Retaining screw

3. Lower the unit onto the studs of the hydraulic cylinder.

4. Move the mounting unit's cables and water couplings to one side to ensure that they do not restrict the movement of the mounting unit when you lock it into position.
5. When the mounting unit is located on top of the hydraulic cylinder, turn it clockwise until the 2 arrows are aligned and it locks into position.

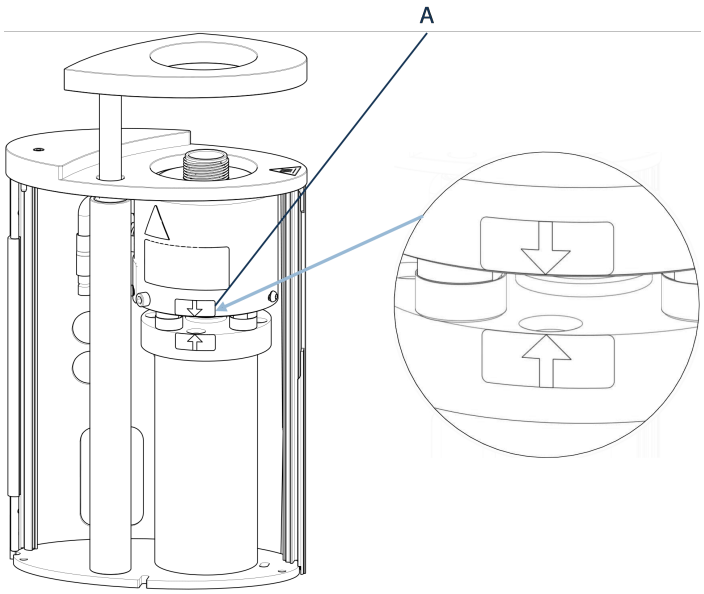

A Arrows aligned

> **Note**
> Double-check that the mounting unit is locked into position. If it is not, Mounting units may be damaged during operation.

6. For CitoPress-30: If the mounting unit is to be mounted on the right tower, move the retaining screw to the hole for retaining screw for unit 2.
7. Tighten the retaining screw.

Mounting unit, side view

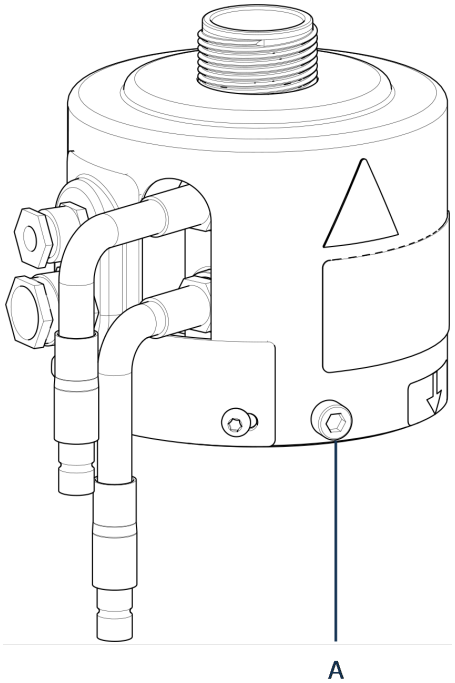

A Retaining screw

8. Connect the mounting unit's 2 loose cables to the 2 sockets on Mounting units.
   - The large plug to the large socket (with the red dot on the plug facing up) and the small plug to the small socket.
   - Tighten the coupling nuts on both plugs to secure the connection.

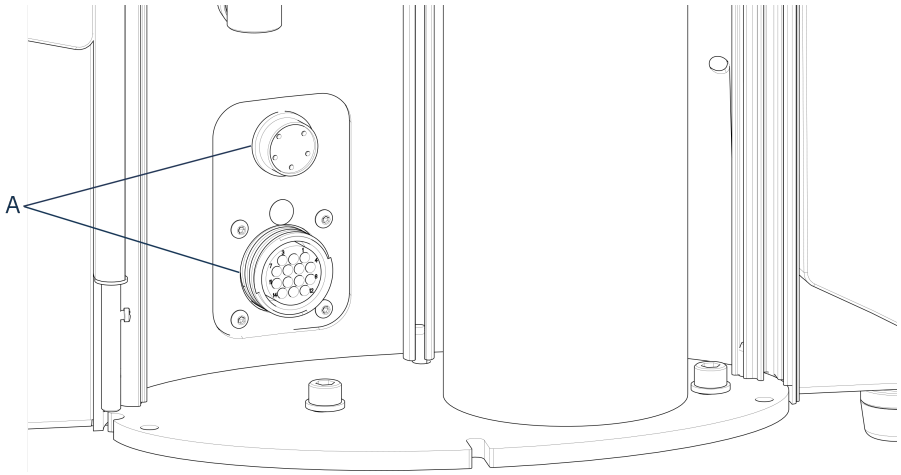

A Sockets

Water connections

The water connections are color-coded:

- The inlet connectionis red (B)

- The outlet connection is blue (C)

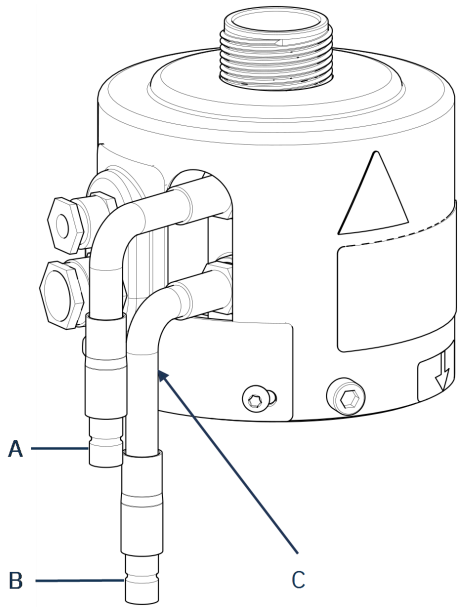

A Inlet connection: male fitting (red)

B Outlet connection: male fitting (blue)

C Hole for retaining screw for 2nd unit (right tower on CitoPress-30 only.

9. Connect the male inlet and outlet water couplings on the mounting unit to the female fittings on CitoPress.
   - Hold the spring-loaded collar down and connect the water coupling.
   - Release the spring-loaded collar and check the water connection is secure.
10. Close the cover.
11. Replace the top plate and fasten the cover screw.

> **Note**
> To ensure optimal performance and operator safety:
> - Ensure that the arrows are aligned to lock the mounting unit into position.
> - Ensure that the retaining screw is tightened.
> - Close the cover and replace the top plate.

Install the swivel arm

12. Mount the swivel arm by sliding it through the hole in the top plate and into the sleeve in the mounting unit cover.

Mount the top closure

13. Mount the top closure in the hole in the top of the swivel arm.

> **Note**
> When you have changed the mounting unit, you must also change to the appropriate size of top closure.

4.5 Replace the lower ram

Access the lower ram

1. Switch the machine on.
2. Hold **Down** for a few seconds to lower the ram to its lowest limit.

3. Switch the machine off.
4. Remove the top closure and the swivel arm. See "Overview" in the Instruction Manual for the CitoPress.
5. Remove the cover screw.
6. Remove the mounting unit top plate.
7. Open the mounting unit cover.

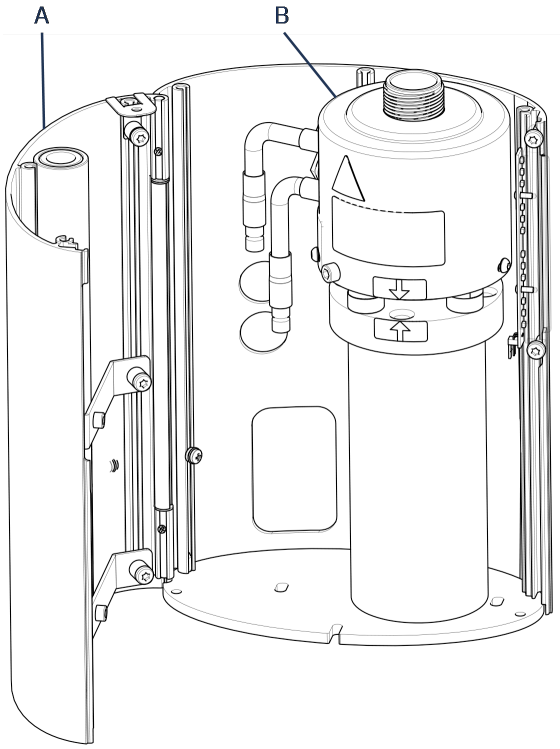

A Mounting unit cover

B Mounting unit

8. Disconnect the water hoses.
9. Remove the retaining screw.
10. Twist the mounting unit counter clock-wise, and lift it off.

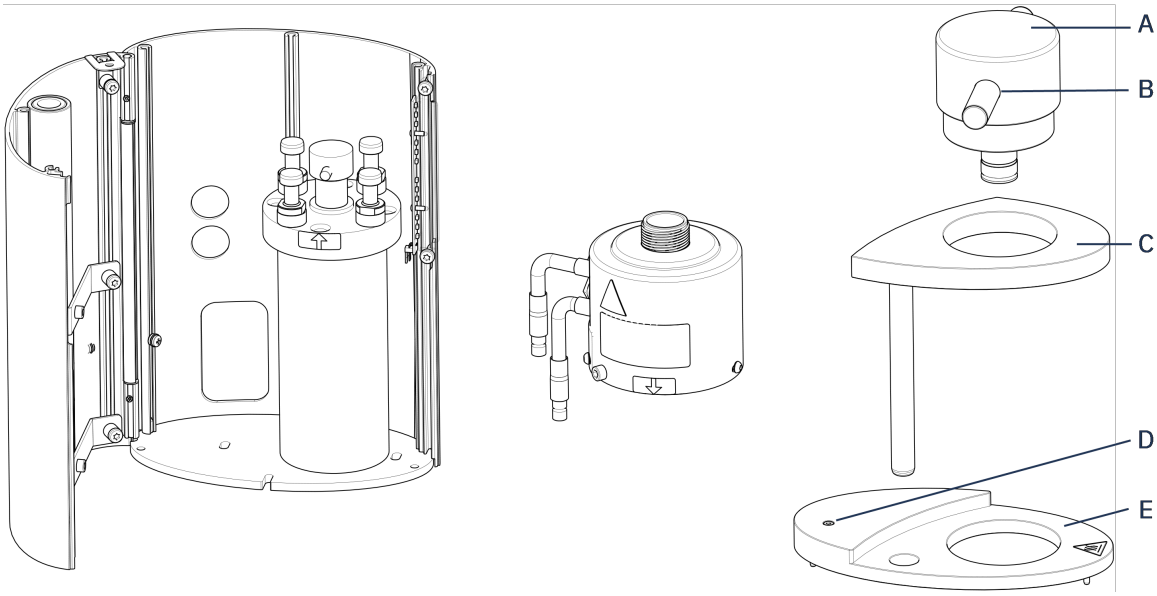

A Top closure cap (of lower ram)

B Piston pin

C Swivel arm for top closure

D Cover screw

E Mounting unit top plate

11. Push the piston pin out from the lower ram, and lift it off.
12. Place the new lower ram on the top of the piston rod.
13. Align the hole in the lower ram with the hole in the axle journal on top of the rod.

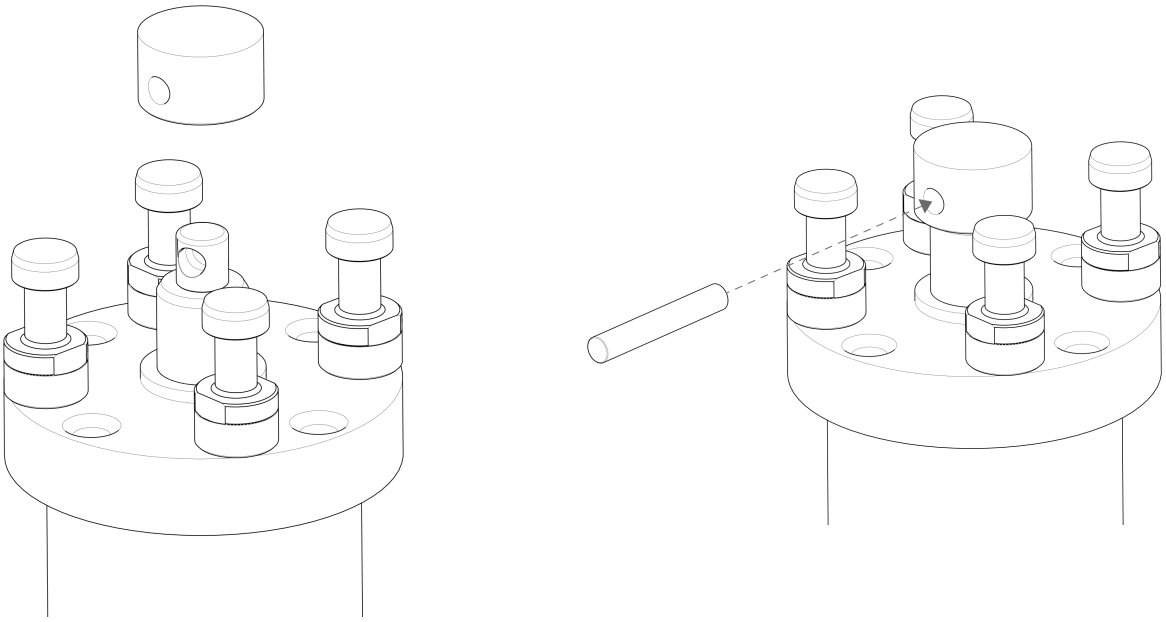

14. Insert the piston pin.
15. Make sure that the ends of the pin do not protrude.

Assemble the mounting unit

1. Mount the mounting unit, and turn it clock-wise until the 2 arrows align.
2. Mount the chamfered retaining screw – do not use force.
3. Connect the water.
4. Close the mounting unit cover, and mount the mounting unit top plate.
5. Fasten the cover screw.
6. Mount the top closure and the swivel arm.

Hint
A build-up of mounting material can make it difficult to remove the lower ram from the mounting unit.

Note
Contact Struers Service for advice on how to loosen the lower ram.

4.6 Remove the mounting unit

ELECTRICAL HAZARD
Disconnect the machine from the electrical power supply and water supply before installing or removing the mounting unit.

ELECTRICAL HAZARD
The mounting unit must only be installed or removed by skilled technicians.

CAUTION
During operation, the mounting unit becomes very hot. Make sure that it is cool enough to be handled before you remove it.

1. Remove the top closure.
2. Remove the swivel arm by lifting it out of its mounting.
3. Remove the cover screw.
4. Remove the top plate.
5. Open the mounting unit cover.

Note
Disconnect the water and electrical connections in the order as described. If you disconnect the electrical connections before the water connections, water could leak into the connections.

6. Disconnect the male inlet and outlet water couplings of the mounting unit from the female fittings of the machine.
7. Wait 5 seconds to allow the water to flow out of the cooling coil.

8. Loosen the coupling nuts on both the large and small electrical plugs, then pull the plugs out of the sockets.
9. Loosen the retaining screw.
10. Turn the mounting unit in an anti-clockwise direction until it stops.
11. Lift the mounting unit free of the hydraulic cylinder.

4.7 Replace the mounting unit

Follow the instructions in Remove the mounting unit ►17 and Install the mounting unit ►11.

4.8 Remove the upper ram

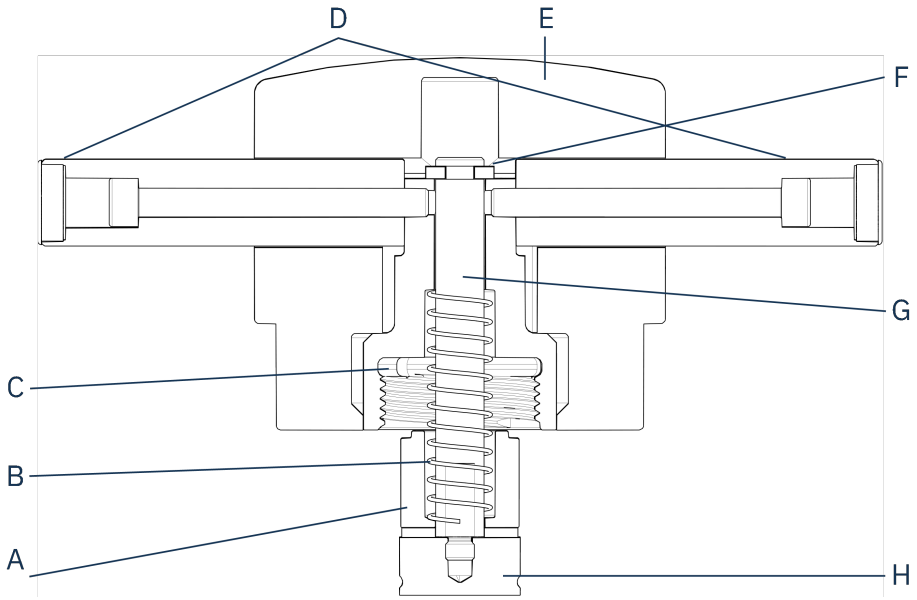

A Spacer
B Spring
C Top nut
D Handles
E Top closure cap
F Retaining washer
G Rod
H Upper ram

1. Unscrew the handles (D) on either side of the top closure cap (E).
2. Remove the handles by turning them counter-clockwise.
3. Remove the top closure cap.
4. Remove the retaining washer (F).
5. Remove the top nut (C), spring (B) and spacer (A).
6. Pull out the upper ram (H). Do not remove the rod (G) from the upper ram unless absolutely necessary.
7. If you must remove the rod, hold the upper ram in a vice or a similar device with soft jaws.

Note
The ram surface must be protected with plastic or soft metal.

5 Transport and storage

If, at any time after the installation, you have to move the unit or place it in storage, there is a number of guidelines we recommend that you follow.

- Package the unit securely before transportation. Insufficient packaging could cause damage to the unit and will void the warranty. Contact Struers Service.
- We recommend that you use the original packaging and fittings.

ELECTRICAL HAZARD
Disconnect the machine from the electrical power supply and water supply before installing or removing the mounting unit.

CRUSHING HAZARD
Take care of your fingers when handling the machine.
Wear safety shoes when handling heavy machinery.

Note
Package the unit securely before transportation.
We recommend that you keep all original packaging and fittings for future use.

- Mounting units can be transported whilst installed on CitoPress.
- Clean and dry Mounting units before storage.

Long-time storage or shipping – additional steps

1. Wrap the mounting unit in a plastic sheet (or bag), together with a desiccant (silica gel).
2. Tape the plastic sheet (or bag) closed to keep the mounting unit dry.
3. Pack in a cardboard box.

6 Basic operation

For additional information on operation of CitoPress, see the CitoPress Instruction Manual.

6.1 Application Guide for Hot Mounting

Hint
Find useful mounting data and hints in Struers **Application Guide for Hot Mounting**. This is delivered with the machine but is also available in the Struers website on http://www.struers.com.

7 Maintenance

Proper maintenance is required to achieve the maximum up-time and operating lifetime of the machine. Maintenance is important in ensuring continued safe operation of your machine.

The maintenance procedures described in this section must be carried out by skilled or trained personnel.

7.1 Before each mounting

7.1.1 Clean the rams

1. Make sure that there is no mounting material left on the flat surface of the rams from previous operations.
2. Clean the cylindrical surface of the upper ram. Use the scraper supplied to remove any residues of mounting material without damaging the surface of the rams.

Note
If the sides of the rams are heavily scratched, they must be replaced.
If the top closure has been dropped, causing a dent or deformation in the edge of the upper ram, the ram must also be replaced.

Note
Accumulated mounting material can restrict movement or cause damage to the rams.

7.2 Daily

7.2.1 Inspection and cleaning

Inspection

- Check the machine before each use. Do not use the machine until any damage is repaired.

Cleaning

- Clean all accessible surfaces with a soft, damp cloth.

Hint
Do not use a dry cloth as the surfaces are not scratch resistant.
You can remove grease and oil with ethanol or isopropanol.

Note
Never use acetone, benzol or similar solvents.

- Remove residues from exposed surfaces, including the threads
  - **A** Open the cover (see Remove the mounting unit ►17).
  - **B** Close the cover (see Install the mounting unit ►11).

7.2.2 Lubricate the threads of the top closure

A build-up of residues of mounting material can make it difficult to close the top closure.

1. Remove the top-closure.
2. Use the scraper supplied or a paint brush to remove any mounting material on the threads of the top closure and mounting unit.

Note
The top nut is a wear part because its threads get worn over time. Therefore, it is crucial to remove any residues of mounting material, or it will reduce the lifetime of the top nut.

3. Lubricate the threads with a dry lubricant resistant to high temperatures as the mounting cylinder operates at high temperatures.

Note
Do not lubricate the threads in the joint between the top closure and the mounting cylinder with oil or grease.

Hint
If there is a slight friction in the threads, lubicate with a dry lubricant such as Molybdenum Sulphite or graphite.

7.3 Monthly

7.3.1 Clean under the lower ram

During the process, some cured mounting material will fall down from the lower ram and build up underneath. You must remove this to prevent it from harming the machine.

Pop-up message

A message pops up after 200 mounting cycles (default value) to remind you to clean beneath the lower ram.

1. Press **OK** when you have cleaned the area under the lower ram.
2. Press Later to continue operating the machine.

Procedure

1. Remove the mounting unit.
2. Remove the piston pin and dismount the lower ram.
3. Remove the mounting material under the lower ram with a cloth or a soft brush.
4. Remount the lower ram and secure with the piston pin.
5. Install the mounting unit.

7.3.2 Check the threads

The threads of the top nut will get worn over time and therefore the top nut is a wear part.

1. Inspect the threads of the top nut.
2. If the threads are worn, do not use the top closure anymore.
3. Contact Struers Service, and order a new top nut.

7.3.3 Decalcify the cooling coil

When you use cooling water from the mains tap in areas with a high chalk or mineral content, deposits can build up in the cooling coil and reduce the cooling effect. In this case, you should decalcify the cooling coil once a year.

1. Remove the mounting unit (see Remove the mounting unit ►17).
2. Drain water from the cooling system.
3. Flush the coil with a mild decalcifying acid, and leave for ½ hour.

Hint
Decalcifying acid
For decalcification of the mounting unit acetic acid or citric acid is recommended.
Do not use oxidizing acids such as nitric acid (HNO_3), this will degrade the copper of the mounting unit and may generate toxic gases.
Do not use acids in combination with oxidizing agents such as hydrogen peroxide (H_2O_2), this will degrade the copper of the mounting unit.

4. Flush the cooling coil with clean water.
5. Re-install the mounting unit (see Install the mounting unit ►11).

If there are still deposits in the coil, repeat this procedure and leave the decalcifying fluid in the mounting unit overnight before flushing with water the next day.

7.4 Annually

7.4.1 Check the bolts

1. Use a 17 mm torque wrench.
2. Check that the bolts that hold the mounting unit to the cylinder are tight.
3. If necessary, tighten with a force of maximum 25 Nm / 18 lbf ft.

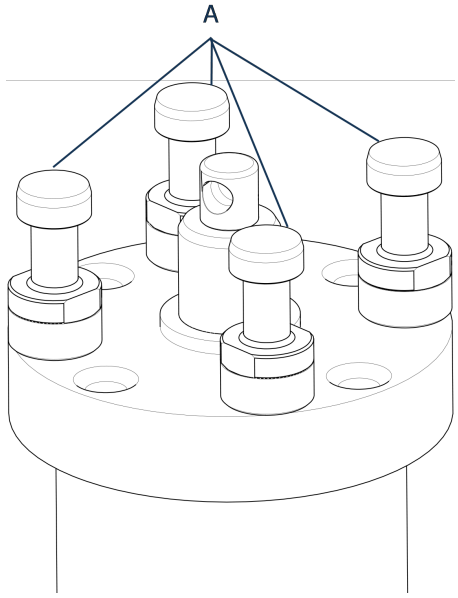

A Bolts

7.4.2 Water couplings

To maintain the inlet and outlet connections for the mounting unit, lubricate the FPM/FKM O-rings in the water couplings.

This is to prevent them from drying out over time, which will make the water couplings difficult to use when you change the mounting unit.

1. Disconnect the mounting unit's male inlet and outlet water couplings from the machine's female fittings.
2. Lubricate the O-rings in the female fittings.

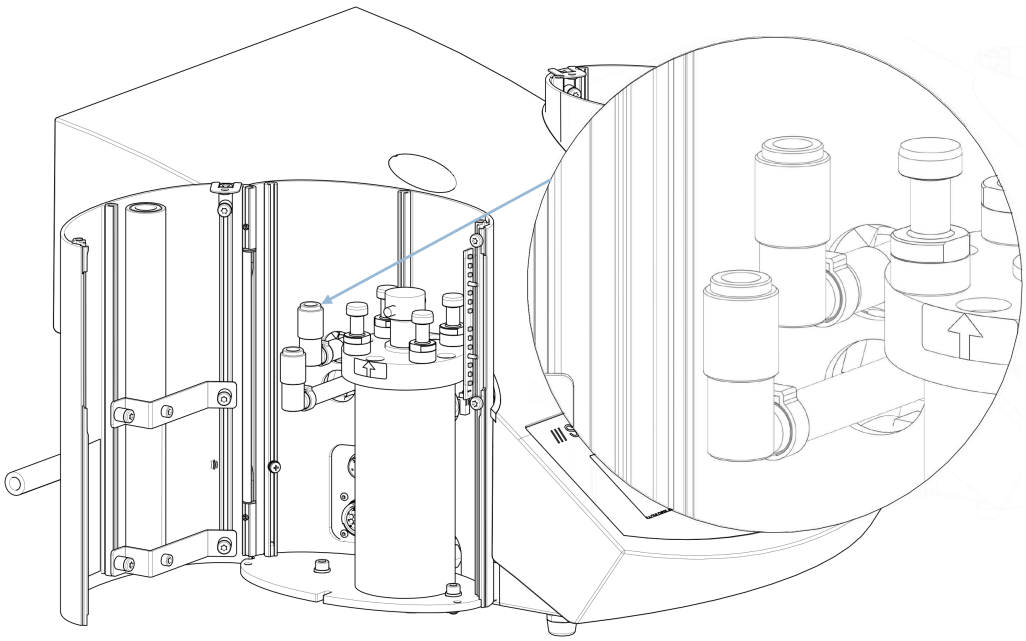

Note
Use a generic tap lubricant resistant to high temperatures (min. 100°C/212°F) to lubricate the FPM/FKM O-ring in the water coupling.

8 Spare parts

Technical questions and spare parts

If you have technical questions or when you order spare parts, state serial number and voltage/frequency. This information is stated on the name plate of the machine.

For further information, or to check the availability of spare parts, contact Struers Service. Contact information is available on Struers.com.

9 Disposal

Equipment marked with a WEEE symbol contains electrical and electronic components and must not be disposed of as general waste.

Contact your local authorities for information on the correct method of disposal in accordance with national legislation.

For disposal of consumables and recirculation fluid, follow local regulations.

10 Technical data sheet

		With CitoPress-5
Mounting specifications		
Mounting Units (optional)	Diameter	25, 30, 40, 50 mm / 1¼", 1½"
Compression	Mounting pressure:	50-350 bar in steps of 25 bar/725-5076 psi in steps of 363 psi. For 50 mm cylinder in diameter, the max. pressure is limited to 250 bar/3625 psi

		With CitoPress-5
Heating (with pressure on)	Temperature:	120, 150, 180℃ / 248, 302, 356℉
	Time:	Variable between 1 and 15 min
Cooling (with pressure on)	Time:	Variable between 1 and 15 min
	High rate:	Full flow (4.8 L/min)
	Mediuem rate:	20% of full flow (0.96 L/min)
	Low rate:	3% of full flow (0.14 L/min)
Physical specifications		
Water supply		Tap water
	Pressure for tap water:	1-6 bar / 14.5-87 psi
	Inlet:	¾" dia.
	Outlet:	10 mm dia. / 0.4”
Power supply	Voltage/frequency:	200-240 V, 50-60 Hz / 100-120 V, 50-60 Hz
	Power phases:	1-phase (N+L1+PE), 2-phase (L1+L2+PE)
	Power consumption:	200-240 V, 50-60 Hz / 100-120 V, 50-60 Hz
	Idle:	8 W
	Max:	1300 W, 200-240 V / 1300 W, 100-120 V
	Current:	5.6 A, 200-240 V / 13 A, 100-120 V
	Residual Current Circuit Breaker (RCCB)	Type A, 30 mA (EN 50178/5.2.11.1) or better is required
Dimensions and weight	Width:	480 mm / 19"
	Width:	560 mm / 22"
	Depth:	560 mm / 22”
	Height (Mounting unit and top closure installed):	450 mm / 17.7"
	Weight:	34 kg / 75 lbs
Standard specifications		

		With CitoPress-5
Safety standards	Refer to the Declaration of Conformity	
Environmental specifications		
Noise levels	Idle:	0 dB (A)
	A-weighted sound emission pressure level at workstations:	LpA = 61.5 dB(A) (measured value) K = 4 dB(A)
	Measurements made in accordance with EN ISO 11202. The figures quoted are emission levels and are not necessarily safe working levels. While there is a correlation between the emission and exposure levels, this cannot be used reliably to determine whether or not further precautions are required. Factors that influence the actual level of exposure of the workforce include characteristics of the work room, the other sources of noise, etc., i.e. the number of machines and other adjacent processes. Also, the permissible exposure level can vary from country to country. This information, however, will enable the user of the machine to make a better evaluation of the hazard and risk.	
Operating environment	Temperature (operational):	5-40 °C / 41-104 °F
	Humidity:	<85 % RH non-condensing
Storage conditions	Temperature:	-25-55°C / -13-131°F
	Humidity:	<95 % RH (non-condensing)
Interface specifications		
Controls		Touch pad, turn/push-knob
LCD display with white LED backlight		4.8"

		With CitoPress-15/-30
Mounting specifications		
Mounting Units (optional)	Diameter	25, 30, 40, 50 mm / 1¼", 1½"

		With CitoPress-15/-30
Compression	Force on piston rod:	50-350 bar in steps of 25 bar / 725-5076 psi in steps of 363 psi Note: When you use 50 mm cylinder diameter, the max pressure is limited to 250 bar/3.625 psi.
Heating (with pressure on)	Temperature:	120, 150, 180℃ / 248, 302, 356° F
	Time:	Variable between 1 and 15 min
Cooling (with pressure on)	Time:	Variable between 1 and 15 min
	High rate:	Full flow (4.8 L/min)
	Mediuem rate:	20% of full flow (0.96 L/min)
	Low rate:	3% of full flow (0.14 L/min)
Dosing (based on optional CitoDoser)		20-150%
Physical specifications		
Water supply		Tap water
	Pressure for tap water:	1-6 bar / 14.5-87 psi
	Inlet:	¾" dia.
	Outlet:	10 mm dia. / 0.4”

		With CitoPress-15/-30
Power supply	Voltage/frequency:	200-240 V, 50-60 Hz / 100-120 V, 50-60 Hz
	Power phases:	1-phase (N+L1+PE), 2-phase (L1+L2+PE)
	Power consumption:	200-240 V, 50-60 Hz / 100-120 V, 50-60 Hz
	Idle:	8 W
	Max (CitoPress-15):	1300 W
	Max (CitoPress-30):	2300 W / 1300 W
	Current (CitoPress-15):	5.6 A / 13 A
	Current (CitoPress-30):	10 A / 13 A
	Residual Current Circuit Breaker (RCCB)	Type A, 30 mA (EN 50178/5.2.11.1) or better is required
Dimensions and weight	Width (CitoPress-15):	480 mm / 19"
	Width (CitoPress-30):	550 mm / 21.5"
	Depth:	560 mm / 22”
	Height (Mounting unit and top closure installed):	450 mm / 17.7"
	Height (Including CitoDoser):	550 mm / 21.5”
	Weight (CitoPress-15):	34 kg / 75 lbs
	Weight (CitoPress-30):	48 kg / 106 lbs
	Weight (CitoDoser):	3.1 kg/7 lbs
Standard specifications		
Safety standards	Refer to the Declaration of Conformity	
Environmental specifications		

		With CitoPress-15/-30
Noise levels	Idle:	0 dB (A)
	A-weighted sound emission pressure level at workstations:	LpA = 61.5 dB(A) (measured value) K = 4 dB(A)
	Measurements made in accordance with EN ISO 11202. The figures quoted are emission levels and are not necessarily safe working levels. While there is a correlation between the emission and exposure levels, this cannot be used reliably to determine whether or not further precautions are required. Factors that influence the actual level of exposure of the workforce include characteristics of the work room, the other sources of noise, etc., i.e. the number of machines and other adjacent processes. Also, the permissible exposure level can vary from country to country. This information, however, will enable the user of the machine to make a better evaluation of the hazard and risk.	
Operating environment	Temperature (operational):	5-40 °C / 41-104 °F
	Humidity:	<85 % RH non-condensing
Storage conditions	Temperature:	-25-55°C / -13-131°F
	Humidity:	<95 % RH (non-condensing)
Interface specifications		
Controls		Touch pad, turn/push-knob
LCD display with white LED backlight		5.2"

11 Manufacturer

Struers ApS
Pederstrupvej 84
DK-2750 Ballerup, Denmark
Telephone: +45 44 600 800
Fax: +45 44 600 801
www.struers.com

Responsibility of the manufacturer

The following restrictions should be observed, as violation of the restrictions may cause cancellation of Struers legal obligations.

The manufacturer assumes no responsibility for errors in the text and/or illustrations in this manual. The information in this manual is subject to change without notice. The manual may mention accessories or parts not included in the supplied version of the equipment.

The manufacturer is to be considered responsible for effects on safety, reliability, and performance of the equipment only if the equipment is used, serviced, and maintained in accordance with the instructions for use.

Struers
Ensuring Certainty

Based on: 15787901 D

Declaration of Incorporation of Partly Completed Machinery

Manufacturer	Struers ApS • Pederstrupvej 84 • DK-2750 Ballerup • Denmark
Name	Mounting units for CitoPress
Model	N/A
Function	Embedding of samples
Type	0578
Cat. no.	05788127, 05788227, 05788327, 05788427, 05788527, 05788627
The above listed machinery is only intended to be used with:	CitoPress-5, CitoPress-15, CitoPress-30
And shall not be put into service until the final machinery into which it is to be incorporated has been declared in conformity with this regulation, where appropriate.	
Serial no.	

CE Module H, according to global approach **EU**

We declare that the product mentioned is in conformity with the following legislation, directives and standards:

2011/65/EU	EN 63000:2018
2014/35/EU	EN 60204-1:2018, EN 60204-1-2018/Corr.:2020
Additional standards	NFPA 79, FCC 47 CFR Part 15 Subpart B

Authorized to compile technical file/
Authorized signatory

Date: [Release date]

Struers
Ensuring Certainty

en	For translations see
bg	За преводи вижте
cs	Překlady viz
da	Se oversættelser på
de	Übersetzungen finden Sie unter
el	Για μεταφράσεις, ανατρέξτε στη διεύθυνση
es	Para ver las traducciones consulte
et	Tõlked leiate aadressilt
fi	Katso käännökset osoitteesta
fr	Pour les traductions, voir
hr	Za prijevode idite na
hu	A fordítások itt érhetők el
it	Per le traduzioni consultare
ja	翻訳については、
lt	Vertimai patalpinti
lv	Tulkojumus skatīt
nl	Voor vertalingen zie
no	For oversettelser se
pl	Aby znaleźć tłumaczenia, sprawdź
pt	Consulte as traduções disponíveis em
ro	Pentru traduceri, consultați
se	För översättningar besök
sk	Preklady sú dostupné na stránke
sl	Za prevode si oglejte
tr	Çeviriler için bkz
zh	翻译见

www.struers.com/Library