Struers
Ensuring Certainty

Discotom-100

Instruction Manual

Original Instructions

Doc. no.: 16157025-06_A-en
Date of release: 2025.12.15

Copyright

The contents of this manual are the property of Struers ApS. Reproduction of any part of this manual without the written permission of Struers ApS is not allowed.

All rights reserved. © Struers ApS.

Table of Contents

1 About this manual **6**
1.1 Accessories and consumables 6
2 Safety **6**
2.1 Intended use 6
2.2 Safety precautions 7
2.3 Safety messages 8
2.4 Safety messages in this manual 9
3 Get started **12**
3.1 Device description 12
3.2 Overview 13
3.3 Dimensions 17
3.4 Control panel functions 18
4 Transport and storage **20**
4.1 Storage 20
4.2 Transport 20
5 Installation **21**
5.1 Unpack the machine 21
5.2 Check the packing list 21
5.3 Lift the machine 22
5.4 Location 24
5.5 Power supply 26
5.5.1 Connection to the machine 26
5.5.2 Power supply cable - recommended specifications 27
5.5.3 External short circuit protection 27
5.5.4 Residual Current Circuit Breaker (RCCB) 28
5.6 Recirculation cooling unit 28
5.7 Exhaust (optional) 29
5.8 Noise 30
5.9 Vibration 30
6 Operate the device **31**
6.1 Change the cut-off wheel 31
6.2 Clamp the workpiece 31
6.3 Position the cutting table 32
6.4 Basic operation 32

6.4.1 Flushing gun ... 32
6.4.2 Cutting table ... 34
6.4.3 Display ... 34
6.4.4 Edit values ... 36
6.4.5 Software settings ... 38
6.4.6 Operation mode ... 41
6.4.7 Change the cutting mode and parameters ... 42
6.4.8 Stop modes ... 57
6.4.9 Motor load and temperature display ... 60
6.4.10 Start the cutting process ... 61
6.4.11 Stop the cutting process ... 63
6.5 Configuration ... 63
6.5.1 Options ... 63
6.5.2 User defined cut-off wheels ... 65
6.5.3 Reset functions ... 66
6.6 Optimize cutting results ... 67
7 Maintenance and service ... 68
7.1 General cleaning ... 68
7.1.1 Recirculation unit ... 69
7.1.2 AxioWash ... 69
7.2 Daily ... 70
7.2.1 The machine ... 70
7.2.2 Protective cover ... 71
7.2.3 Wheel guard ... 72
7.2.4 Safety lock ... 72
7.2.5 Clean the flushing gun nozzle ... 72
7.3 Weekly ... 72
7.3.1 The machine ... 72
7.3.2 Cutting chamber ... 73
7.3.3 Recirculation unit ... 73
7.4 Monthly ... 73
7.4.1 Cooling fluid ... 73
7.4.2 Lubricate the cutting table ... 73
7.4.3 Clamping devices ... 74
7.5 Annually ... 74
7.5.1 Test the safety devices ... 74
7.6 Cutting table ... 76
7.7 Cut-off wheels ... 76

8 Spare parts **76**
9 Safety Related Parts of the Control System (SRP/CS) **77**
10 In-line filter **78**
11 Service and repair **78**
11.1 Service information 79
12 Disposal **80**
13 Troubleshooting **81**
13.1 Machine problems 81
13.2 Cutting problems 82
13.3 Error messages 84
14 Technical data **89**
14.1 Technical data 89
14.2 Cutting capacity 92
14.3 Diagrams 93
14.4 Legal and regulatory information 96
15 Manufacturer **96**
Declaration of Conformity **97**

1 About this manual

CAUTION
Struers equipment must only be used in connection with and as described in the Instruction Manual supplied with the equipment.

Note
Read the Instruction Manual carefully before use.

Note
If you want to view specific information in detail, see the online version of this manual.

1.1 Accessories and consumables

Accessories

For information about the available range, see the Discotom-100 brochure on our website at www.struers.com.

Consumables

The machine is designed to be used only with Struers consumables specifically designed for this purpose and this type of machine.

Other products may contain aggressive solvents, which dissolve e.g. rubber seals. The warranty may not cover damaged machine parts (e.g. seals and tubes), where the damage can be directly related to the use of consumables not supplied by Struers.

For information about the available range, visit our website at www.struers.com.

2 Safety

2.1 Intended use

For professional semi-automatic or manual wet abrasive cutting of metallic or other solid materials for further material inspection and only to be operated by skilled/trained personnel. The machine is intended only to be used with cooling fluids and cut-off wheels developed for this purpose and this type of machine.

The machine is for use in a professional working environment (e.g. a materialographic laboratory).

Do not use the machine for the following	Cutting of materials other than solid materials suitable for materialographic studies. In particular, the machine must not be used for cutting of any type of explosive and/or flammable material, or materials which are not stable during machining, heating or pressure. The machine may not be used with cut-off wheels which are not compatible with the machine requirements (e.g. saw-blade or toothed cut-off wheels).
Model	– Discotom-100 with fixed table – Discotom-100 with automatic x-table

2.2 Safety precautions

Read carefully before use

1. Ignoring this information and mishandling of the equipment can lead to severe bodily injuries and material damage.
2. The machine must be installed in compliance with local safety regulations.
3. The machine must be placed on a safe and stable support table.
4. When lifting the machine using a forklift, lift from front or rear - never lift the machine from the side.
5. When lifting the machine using lifting straps, ensure that the straps are crossed and do not press on the sides of the machine.
6. The operator(s) must read the Safety and Operate the device sections of this manual and the relevant sections of the manuals for any connected equipment and accessories. The operator(s) must read the Instructions for Use and, where applicable, Safety Data Sheets for the applied consumables.
7. For maximum safety and lifetime of the machine, use only original Struers consumables.
8. Use only intact cut-off wheels. The cut-off wheels must be approved for use with rotational speeds between 1,500 and 3,000 rpm.
9. The machine is not for use with saw-blade type cut-off wheels.
10. Do not use the machine for cutting materials that are flammable or unstable during the cutting process (e.g. combustible or explosive materials). Do not use the machine for cutting materials that are not suitable for materialographic cutting.
11. Observe the current safety regulations for handling, mixing, filling, emptying and disposal of the additive for cooling fluid.
12. Do not use flammable cooling fluid.
13. All safety functions and guards of the machine must be in working order.
14. Modifying or disabling the protective cover may cause serious hazard.

15. The workpiece must be securely fixed in a quick-clamping device or similar. Large or sharp workpieces must be handled in a safe way.
16. Use of working gloves is recommended as workpieces may be both very hot and produce sharp edges. Wearing of gloves is also recommended when flushing and cleaning the machine.
17. Use of safety shoes is recommended when handling large or heavy workpieces or moving the machine.
18. Use of safety goggles is recommended when using the flushing hose.
19. Cooling fluid may become hot.
20. Do not work on or around cutting table when the table is repositioned using the positioning joystick.
21. The cutting arm should be lowered slowly and carefully, in order to avoid breaking the cut-off wheel.
22. Laser radiation. Do not stare into beam or expose users of telescopic optics. Class 2M laser product.
23. Struers recommends the use of an exhaust system as the materials being cut may emit harmful gasses or dust.
24. The machine emits only moderate noise. However, the cutting process itself may emit noise, depending on the nature of the workpiece. Use hearing protection if exposure to noise exceeds levels set by local regulations.
25. If any of the cutting-chamber cover springs are damaged {at the rear of machine), they must be replaced before the machine is used again.
26. Standard components, like nuts, bolts, springs etc., must be of the same quality and properties as those provided by Struers.
27. Always use a recirculation cooling unit. Observe the current safety regulations for handling, mixing, filling, emptying and disposal of the cooling fluid with additives. Only use suitable cooling fluids that are compatible with the materials and function of the cut-off machine. Use of gloves and goggles is recommended.
28. In case of fire, alert bystanders, the fire brigade and cut power. Use a powder fire extinguisher. Do not use water.
29. The machine must be disconnected from the electrical power supply before any service.
30. Prior to any service, disconnect the machine and wait for 10 minutes until the residual potential on the inverter capacitors is discharged.
31. Do not restart the Discotom-100 or cycle the electrical power supply more than once every three minutes. This may result in damage to the frequency inverter.

2.3 Safety messages

Struers uses the following signs to indicate potential hazards.

ELECTRICAL HAZARD
This sign indicates an electrical hazard which, if not avoided, will result in death, or serious injury.

WARNING
This sign indicates a hazard with a medium level of risk which, if not avoided, could result in death, or serious injury.

WARNING: LASER BEAM
This sign indicates a laser beam hazard which, if not avoided, could result in minor, moderate, or serious injury.

CRUSHING HAZARD
This sign indicates a crushing hazard which, if not avoided, could result in minor, moderate, or serious injury.

HEAT HAZARD
This sign indicates a heat hazard which, if not avoided, can result in minor, moderate, or serious injury.

CAUTION
This sign indicates a hazard with a low level of risk which, if not avoided, could result in minor, or moderate injury.

Emergency stop
Emergency stop

General messages

Note
This sign indicates that there is a risk of damage to property, or a need to proceed with special care.

Hint
This sign indicates that additional information and hints are available.

2.4 Safety messages in this manual

Specific safety precautions - residual risks

ELECTRICAL HAZARD
Switch off the electrical power supply before installing electrical equipment.
The machine must be earthed (grounded).
Make sure that the actual electrical power supply voltage corresponds to the voltage stated on the name plate of the machine.
Incorrect voltage can damage the electrical circuit.

ELECTRICAL HAZARD
Disconnecting the unit from the electrical power supply must only be done by a qualified technician.

WARNING: LASER BEAM
Laser radiation. Do not stare into beam or expose users of telescopic optics. Class 2M laser product.

WARNING
The machine must not be used for any type of explosive and/or flammable material, or materials which are not stable during machining, heating or pressure.

WARNING
To ensure its intended safety, the PETG screen must be replaced every 5 years. A label on the screen indicates when it is due to be replaced.
Replacement of the screen is required to remain compliant with the safety requirements in the European standard EN 16089.

WARNING
Replace the cover screen immediately if it has been weakened by collisions with projectile objects or if there are visible signs of deterioration or damage.

WARNING
If any of the following checks fail, do not use the machine until problems are resolved.

WARNING
Do not use the machine with defective safety devices.

WARNING
Safety critical components must be replaced after a maximum lifetime of 20 years.

CAUTION
This machine must be operated and maintained only by skilled/trained personnel.

CAUTION
The machine is designed to be used only with Struers consumables specifically designed for this purpose and this type of machine.

CAUTION
The protective cover will minimize the risk of ejection but will not eliminate it completely.

CAUTION
Prolonged exposure to loud noises may cause permanent damage to a person's hearing.
Use hearing protection if the exposure to noise exceeds the levels set by local regulations.

CAUTION
Risk of hand to arm vibration during manual preparation.
Prolonged exposure to vibration may cause discomfort, joint damage or even neurological damage.

CAUTION
An inadequately clamped workpiece can be propelled and cause damage.
Make sure that the workpiece is securely fixed in a quick-clamping device or similar.

CAUTION
Avoid skin contact with the coolant additive.

CAUTION
Wear suitable gloves and safety goggles when handling coolant.

CAUTION
Do not start flushing until the flushing gun points into the cutting chamber.

CAUTION
Only use the flushing gun for cleaning inside the cutting chamber.

CAUTION
Always wear protective gloves and safety goggles when you use the flushing gun.

CRUSHING HAZARD
Take care of your fingers when handling the machine.
Wear safety shoes when handling heavy machinery.

HEAT HAZARD
Wear suitable gloves to protect fingers from abrasives and warm/sharp specimens.

General safety precautions

WARNING
Struers equipment must only be used in connection with and as described in the Instruction Manual supplied with the equipment.

WARNING
Switch off the machine, disconnect the electrical power cable and wait 5 minutes before you dismantle the machine or install additional components.

WARNING
In case of fire, alert bystanders, the fire brigade and cut power. Use a powder fire extinguisher. Do not use water.

3 Get started

3.1 Device description

Discotom-100 is a manual/automatic cut-off machine with a motorized Y-table and optional X-table. The machine is designed for wet, abrasive cutting of all stable and non-explosive metals.

The machine must be connected to a suitable recirculation system, which supplies cooling fluid to the workpiece and cut-off wheel during cutting.

The cutting process starts by securing the workpiece to the cutting table with clamping tools. The operator selects the cutting parameters (e.g. cut-off wheel, RPM, feed and cutting length). The protective cover locks when the operator starts the machine, and it remains locked for the duration of the cutting. When the cut-off wheel stops, the lock releases and the workpiece and the specimen can be removed.

Finally, the category B emergency stop cuts the power to the cut-off wheel. The protective cover can be opened once the cut-off wheel comes to a standstill.

The machine can be connected to an external exhaust system to remove fumes from the cutting process.

Note
In case of a power loss during a cutting process, use the special key to open the power-to-open protective cover.

3.2 Overview

Front view

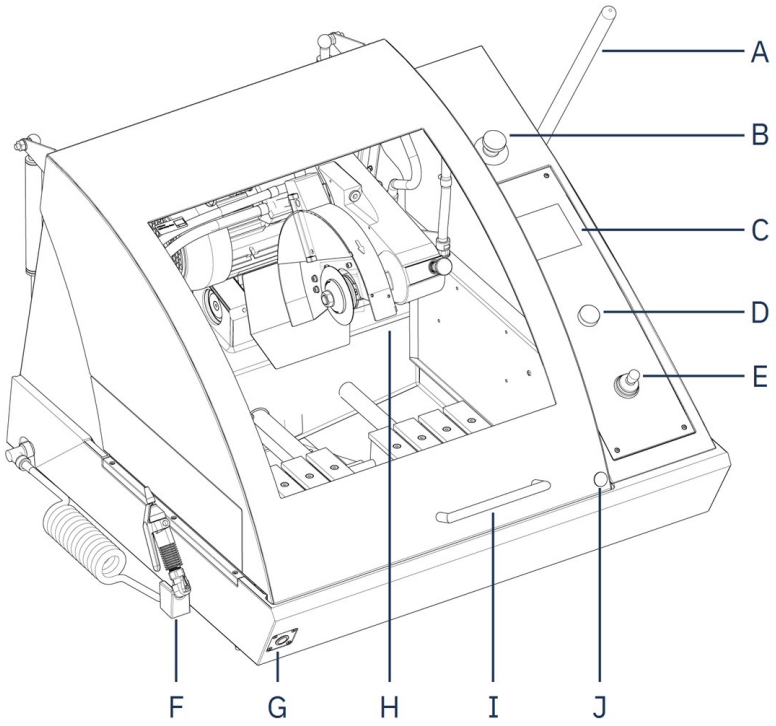

A	Cutting handle	**F**	Flushing gun
B	Emergency stop	**G**	Hold-to-run button
C	Control panel	**H**	Cutting arm
D	Turn/push knob	**I**	Protective cover
E	Joystick for table movement	**J**	Safety lock release

Emergency stop
The emergency stop button is located on the front of the machine.
- Push the red button to activate.
- Turn the red button clockwise to release.

Note
The protective cover can only be opened when the machine is connected to power and switched on. If power is lost, follow these steps to deactivate the lock and open the cover:
1. Insert the triangle key into the safety lock release.
2. Gently, turn the triangle key 180° clockwise to unlock.
3. Remember to reactivate the safety lock release before operating the machine.

Cutting chamber

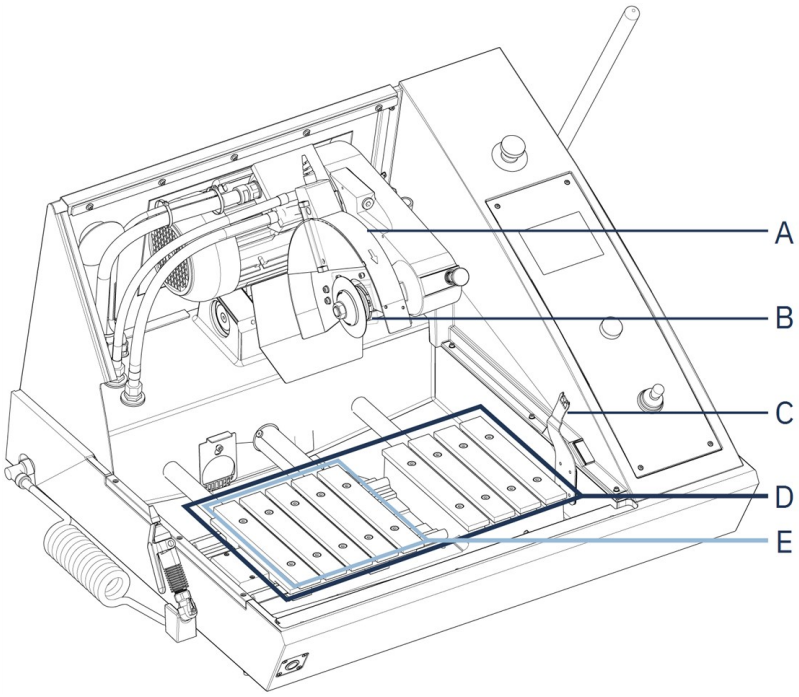

A	Cut-off wheel guard	**D**	Y-table
B	Cut-off wheel flanges	**E**	X-table (optional)
C	Safety lock key		

Note
Do not use the emergency stop for operational stop of the machine during normal operation.

Note
Before releasing (disengaging) the emergency stop, investigate the reason for activating the emergency stop and take any necessary corrective action.

Rear view

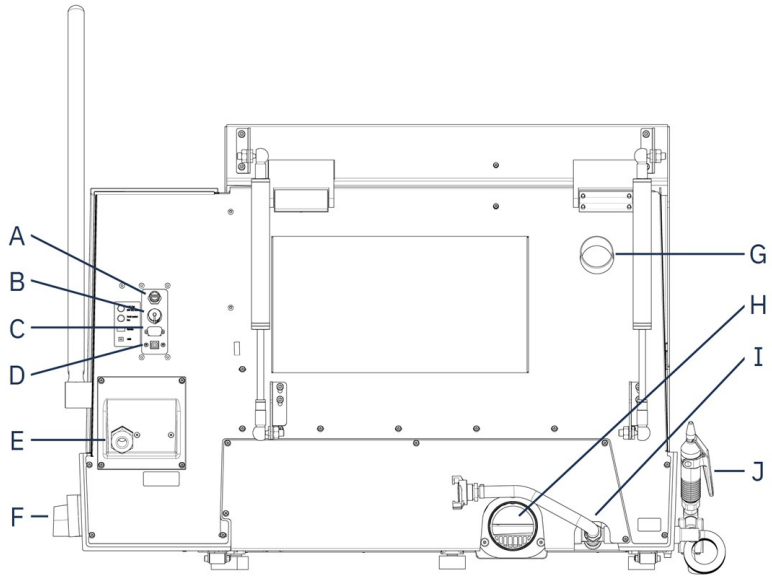

A	AUX Out, 24 VDC, 0.5 A	**F**	Main switch
B	Cooling unit connection	**G**	Exhaust outlet flange
C	Service socket	**H**	Cooling fluid outlet flange
D	USB port for software update	**I**	Cooling fluid inlet
E	Power supply cable connection	**J**	Flushing gun

Main switch

- Turn the main switch clockwise to switch on the power.

Note
The AUX output is turned on during the cutting process.

Hold-to-run button

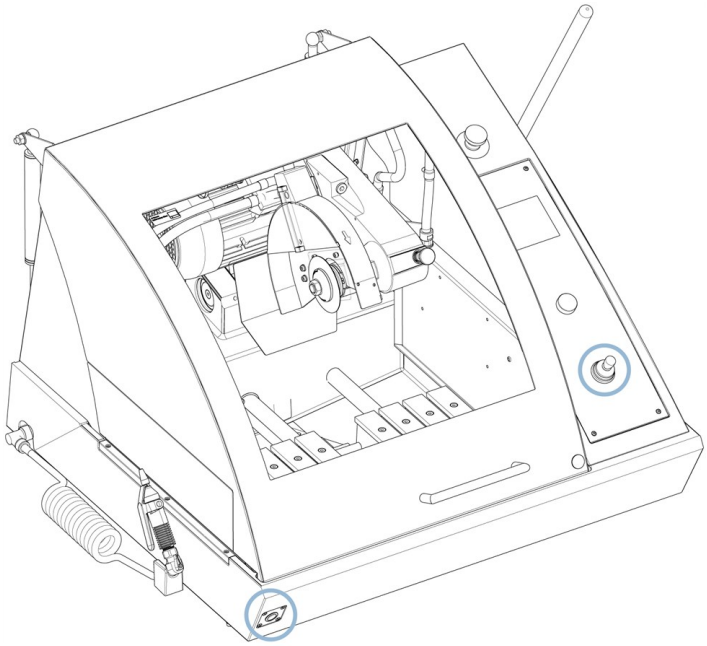

- To position the cutting table while the protective cover is open, press the hold-to-run button while you operate the joystick.

3.3 Dimensions

Side view

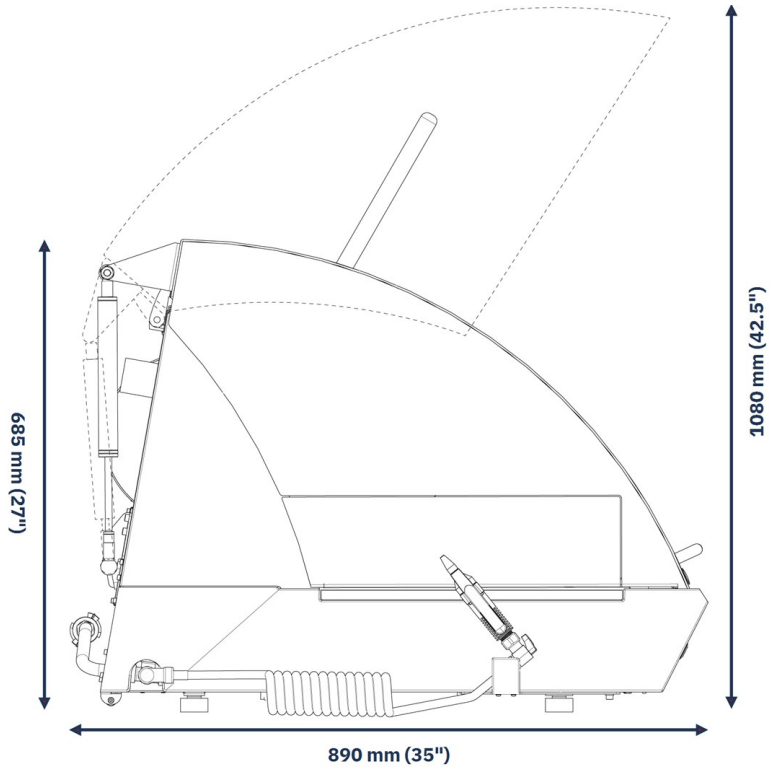

Footprint

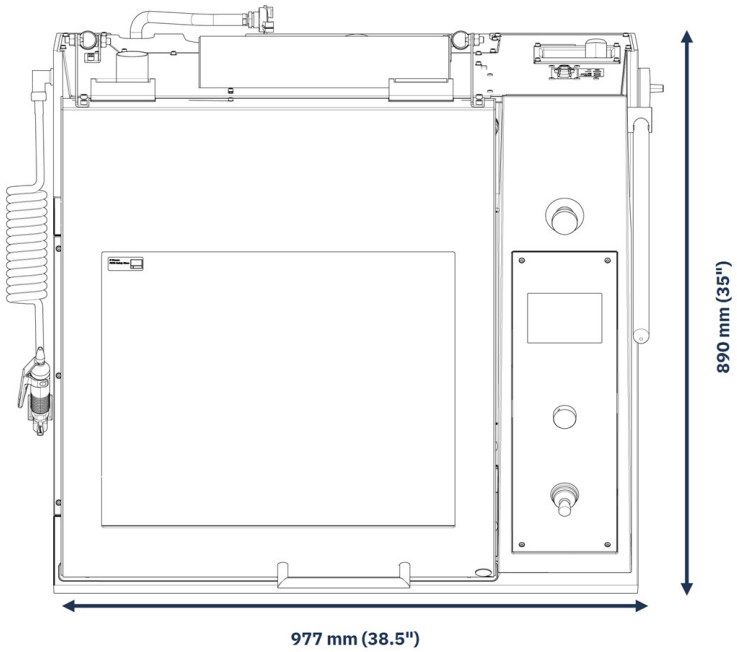

3.4 Control panel functions

A	Display	
B	F1-F4	Menu dependent multifunction keys. See the bottom line of the individual screens.
C	Turn/push knob	Multifunction knob. • Push the knob to select a function. • Turn the knob to adjust settings. • Push the knob to store modified settings.
D	Joystick	• Move up-or down to position the Y-table. • Move left or right to position the X-table (optional)

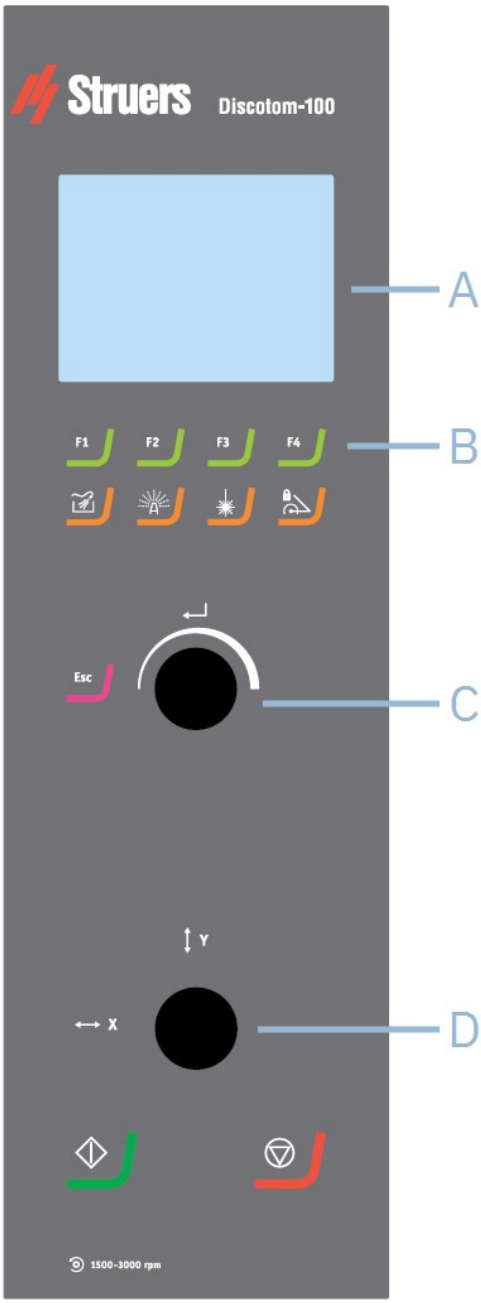

	Flush	Starts and stops the pump to flush the cutting chamber.
	AxioWash	Starts the AxioWash function.
	Line laser	Activates and deactivates the line laser for precise placement of the workpiece.
	Cutting arm lock	Locks and unlocks the cutting arm.
	Escape	Moves one step backward in menus.
	Start	Starts the machine and the recirculation unit and/or the band filter.
	Stop	Stops the machine and recirculation unit and/or band filter.

4 Transport and storage

If, at any time after the installation, you have to move the unit or place it in storage, there is a number of guidelines we recommend that you follow.

- Package the unit securely before transportation. Insufficient packaging could cause damage to the unit and will void the warranty. Contact Struers Service.
- We recommend that you use the original packaging and fittings.

4.1 Storage

ELECTRICAL HAZARD
Disconnecting the unit from the electrical power supply must only be done by a qualified technician.

CRUSHING HAZARD
Take care of your fingers when handling the machine.
Wear safety shoes when handling heavy machinery.

Note
We recommend that you keep all original packaging and fittings for future use.

1. Disconnect the unit from the electrical power supply, the recirculation unit and the exhaust system.
2. Remove any accessories.
3. Clean and dry the unit before storage.
4. Place the machine on the blocks on the pallet.
5. Secure the machine using the transport brackets.
6. Build the crate.
7. Place the machine and accessories in their original packaging. To keep the machine dry, plastic-wrap the machine and place a bag of desiccant (silica gel) with the machine.

4.2 Transport

ELECTRICAL HAZARD
Disconnecting the unit from the electrical power supply must only be done by a qualified technician.

CRUSHING HAZARD
Take care of your fingers when handling the machine.
Wear safety shoes when handling heavy machinery.

Note
We recommend that you keep all original packaging and fittings for future use.

To transport the machine safely, follow these instructions.

Preparing for transport

1. Disconnect the unit from the electrical power supply, the recirculation unit and the exhaust system disconnect
2. Remove any accessories.
3. Secure the cutting arm with the transportation support.
4. Move the recirculation cooling unit.
5. Place the lifting straps on the designated lifting points on the machine.

Note
The crane and the straps must be approved to at least twice the weight of the load.

5 Installation

5.1 Unpack the machine

CRUSHING HAZARD
Take care of your fingers when handling the machine.
Wear safety shoes when handling heavy machinery.

Note
We recommend that you keep all original packaging and fittings for future use.

1. Carefully open and remove the sides and the top of the packing crate. Remove the transport brackets that secure the machine to the pallet.
2. Remove the bolts from all the transport brackets that secure the machine to the transport pallet.
3. Remove the brackets.

Transportation support

A transportation support is mounted to support the cutting arm during transport.

- Remove the transportation support before moving the cutting table.

5.2 Check the packing list

Optional accessories may be included in the packing box.

The packing box contains the following items:

Pcs.	Description
1	Discotom-100
1	Fork spanner for cut-off wheel: 24 mm
1	Triangle key for safety lock release
1	Connector pipe for water outlet
1	Elbow pipe for water outlet
1	Outlet hose for connection to external cooling unit: 2 m
1	Filter tube connection kit
1	Hose clamp: 70 - 90 mm
1	Grease gun
1	Instruction Manual set

5.3 Lift the machine

CRUSHING HAZARD
Take care of your fingers when handling the machine.
Wear safety shoes when handling heavy machinery.

Note
The straps must be approved for at least twice the weight of the machine.
The straps must be long enough so that they do not place stress on the cover of the machine.

Note
The machine's cover can only be opened when the machine is connected to a power supply and the main power switch is on.
To open the cover when the power is not connected, insert the triangle key through the access hole at the front to release the safety lock.
Remember to re-activate the safety lock release before operating the machine.

Weight	
Discotom-100	204 kg (450 lbs)

Transportation support

A transportation support is mounted to support the cutting arm during transport.

- Remove the transportation support before moving the cutting table.

Using a crane

You need a crane and two lifting straps to lift the machine off the shipment pallet.

Before lifting the machine into its final position, do as follows:

1. Remove the screws on the base of the packaging create and remove the top part of the crate.
2. Remove the metal brackets securing the machine to the pallet using a Torx bit T30 key.

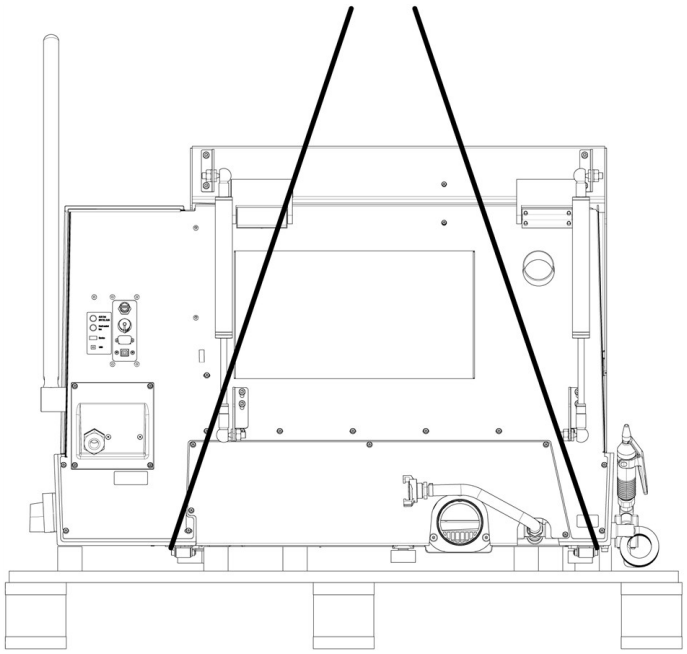

3. Place the two straps under the machine.
4. Place the straps outside the feet on the machine.

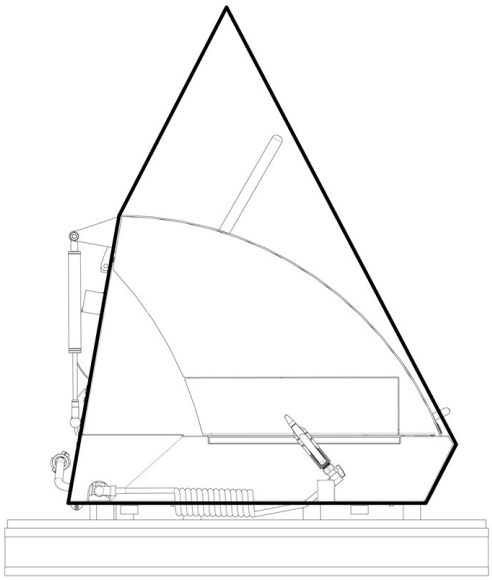

Without lifting bar

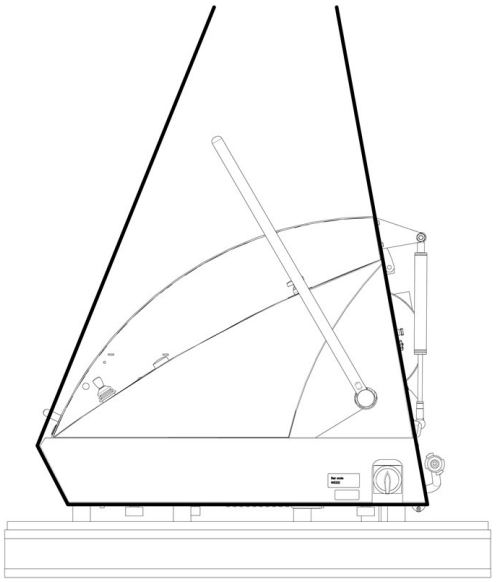

With lifting bar

5. We recommend that you use of a lifting bar to keep the straps apart below the lifting point.
6. Lift the machine onto the table.

7. Lift the front of the machine and carefully move into place using the rollers.

Using a forklift

You can use a forklift to lift the machine off the pallet.

Before lifting the machine into its final position, do as follows:

1. Remove the screws on the base of the packaging create and remove the top part of the crate.
2. Remove the metal brackets securing the machine to the pallet using a Torx bit T30 key.
3. Lift the machine from the pallet using a forklift truck.
4. Position the forks so that the center of mass is between the forks.

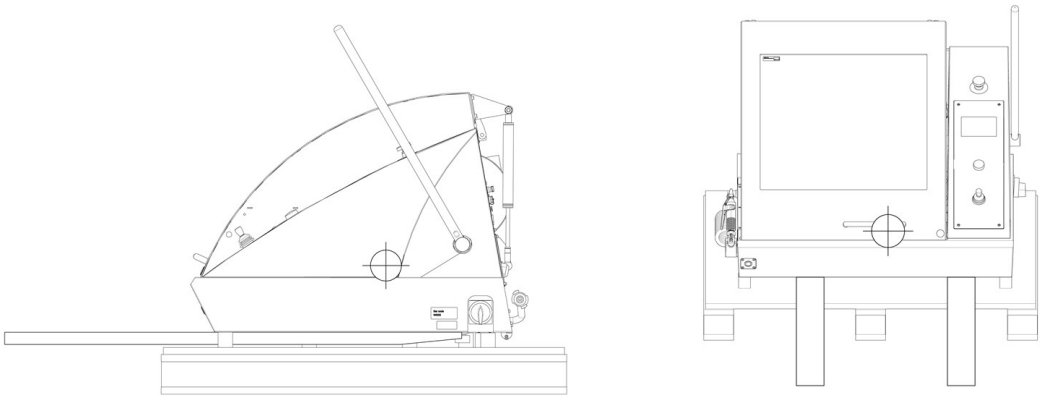

5. Lift the machine onto the table.
6. Lift the front of the machine and carefully move into place using the rollers.

Note
We recommend that you keep all original packaging and fittings for future use.

5.4 Location

CRUSHING HAZARD
Take care of your fingers when handling the machine.
Wear safety shoes when handling heavy machinery.

Make sure that the following facilities are available:

- Power supply

The machine must be placed on a safe and stable table with an adequate working height.The table must be able to carry at least the weight of the machine and the accessories. A workbench designed for Struers table top machines is available as an accessory.

Recommended workbench dimensions	
X	92 cm (36.2")
Y	90 cm (35.4")
Z	80 cm (31.5")

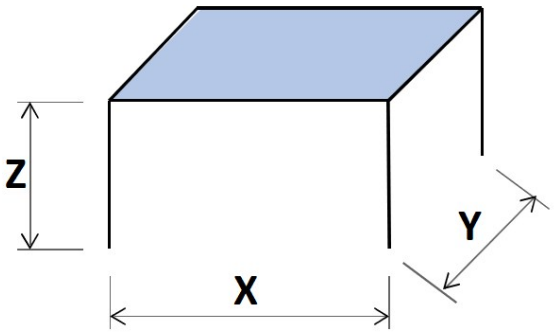

- The machine must be placed close to the electrical power supply, main water supply and waste water drain.
- The machine must be placed in a well-ventilated room or connected to an exhaust system.
- The machine must rest securely with all 4 feet on the table.
- The machine must be completely level.
- Make sure that there is enough room behind the machine for the inlet and outlet hoses.
- Make sure that there is enough room behind the machine to fully open the cover.
- Make sure that there is enough room to access the main switch.
- Make sure that there is enough room around the machine for service access.
- Make sure that there is enough room in front of the machine: 100 cm (40").

Exhaust system (optional)

- Make sure there is at least 17 cm (7") of space for the hose.

Extension tunnel (optional)

- Make sure that there is at least 1 m (40") to the left of the machine for access to the extension tunnel.

Illumination

- Make sure that the work station has adequate lighting. Avoid direct glare (dazzling light sources within the operator's line of vision) and reflected glare (reflections of light sources).

  A minimum of 300 Lumen is recommended to illuminate the controls and other work areas.

Ambient conditions		
Operating environment	Surrounding temperature	Operation: 5 - 40°C (41 - 104°F)
		Storage: 0 - 60°C (32 - 140°F)
	Humidity	Operation: 35 - 85% RH non-condensing
		Storage: 0 - 90% RH non-condensing

5.5 Power supply

ELECTRICAL HAZARD
Switch off the electrical power supply before installing electrical equipment.
The machine must be earthed (grounded).
Make sure that the actual electrical power supply voltage corresponds to the voltage stated on the name plate of the machine.
Incorrect voltage can damage the electrical circuit.

5.5.1 Connection to the machine

Procedure

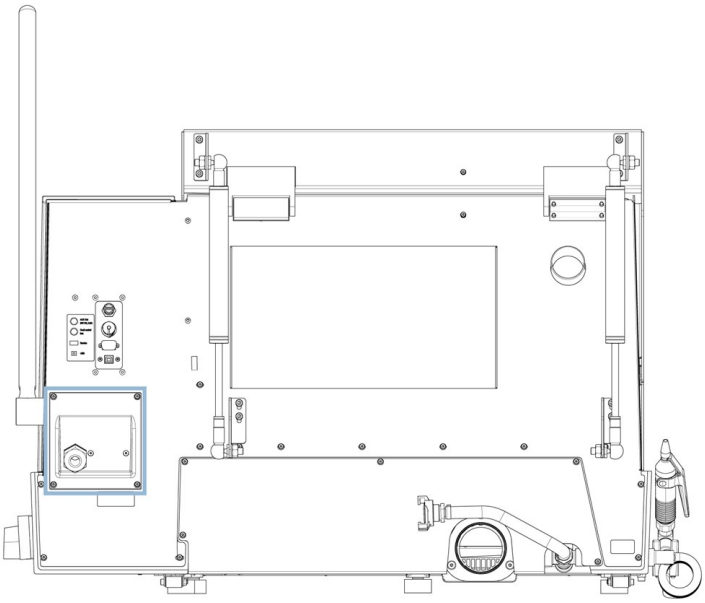

1. Open the electrical connection box.
2. Connect the power cable as described below:

EU cable	UL cable
L1: Brown	L1: Black
L2: Black	L2: Red
L3: Black/Gray	L3: Orange/Turquoise
Earth (ground): Yellow/Green	Earth (ground): Green (or Yellow/Green)
Neutral: Blue - Not used	Neutral: White - Not used

The other end of the cable can be fitted with an approved plug or hard-wired into the mains, according to the electrical specifications and local regulations.

5.5.2 Power supply cable - recommended specifications

Local standards can override the recommendations for the main electrical power supply cable. Always contact a qualified electrician to verify which option is suitable for the local installation setup.

Voltage/frequency	Min. fuse size	Minimum cable size at minimum fuse	Max. fuse size	Minimum cable size at maximum fuse
3 x 200-240 V	30	3x AWG12 / 2.5 mm² + PE	50	3x AWG10 / 4 mm² + PE
3 x 380-480 V	15	3x AWG14 / 1.5 mm² + PE	50	3x AWG10 / 4 mm² + PE

Electrical data

The other end of the cable can be fitted with an approved plug or hard-wired into the power supply according to the electrical specifications and local regulations.

Note
The machine must always be protected by external fuses.See the electrical table for details on the fuse size required.

Voltage/frequency	Nominal load	Max. load
3 x 200 - 240V	16 A	30 A
3 x 380 - 480V	8 A	15 A

5.5.3 External short circuit protection

Note
The machine must always be protected by external fuses.See the electrical table for details on the fuse size required.

5.5.4 Residual Current Circuit Breaker (RCCB)

Note
Local standards can override the recommendations for the main electrical power supply cable. Always contact a qualified electrician to verify which option is suitable for the local installation setup.

Requirements for electrical installations	
With Residual Current Circuit Breakers (RCCB) - Required	Type B time delayed, 30 mA (EN 50178/5.2.11.1)

5.6 Recirculation cooling unit

ELECTRICAL HAZARD
Switch off the electrical power supply before installing electrical equipment.
The machine must be earthed (grounded).
Make sure that the actual electrical power supply voltage corresponds to the voltage stated on the name plate of the machine.
Incorrect voltage can damage the electrical circuit.

To ensure optimal cooling, you must fit the machine with a recirculation cooling unit.

Minimum requirements	
Pump capacity	125 L/min (33 gal/min) at 1 bar

Note
Before connecting the cooling unit to the machine, follow the instructions in the cooling unit Instruction Manual to prepare it for use.

Hint
For intensive use, and for materials generating a lot of swarf, we recommend that you use a recirculation unit with band filter.

To connect the machine to a recirculation cooling unit:

1. Plug the communication cable of the cooling control unit into the machine's control socket.

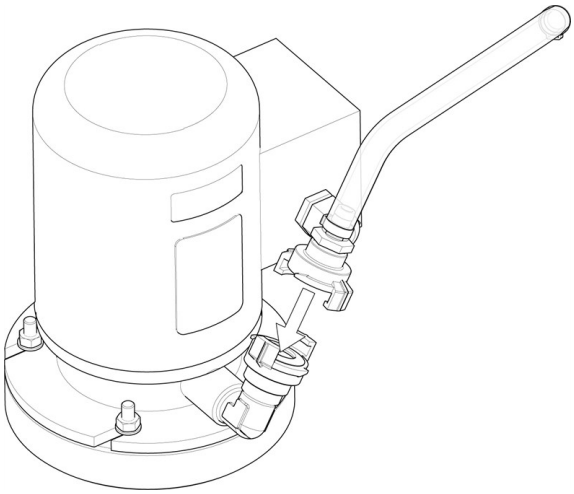

2. Connect the water inlet hose to the pump using the quick coupling.
3. Connect the other end of the hose to the machine's water inlet.

Filter tube kit

Follow the instructions supplied with the filter tube kit.

During the first cutting operation:

- Check that the filter tube expands along its full length as it fills with water.

> **Note**
> If the filter tube is twisted or it has folds, stop cutting and reposition the tube.
> Do not use cooling systems without suitable filters as it can cause clogging and over-flow.
> Do not use filter tubes without a suitable cooling fluid.

- Connect the cooling unit to the main power supply.

5.7 Exhaust (optional)

We recommend the use of an exhaust system, as workpieces can emit harmful gases when cut. The exhaust system will also reduce the level of water condensation on the sides of the cover.

Minimum capacity: 50 m^3/h (1766 ft^3/h).

To connect the machine to an exhaust system:

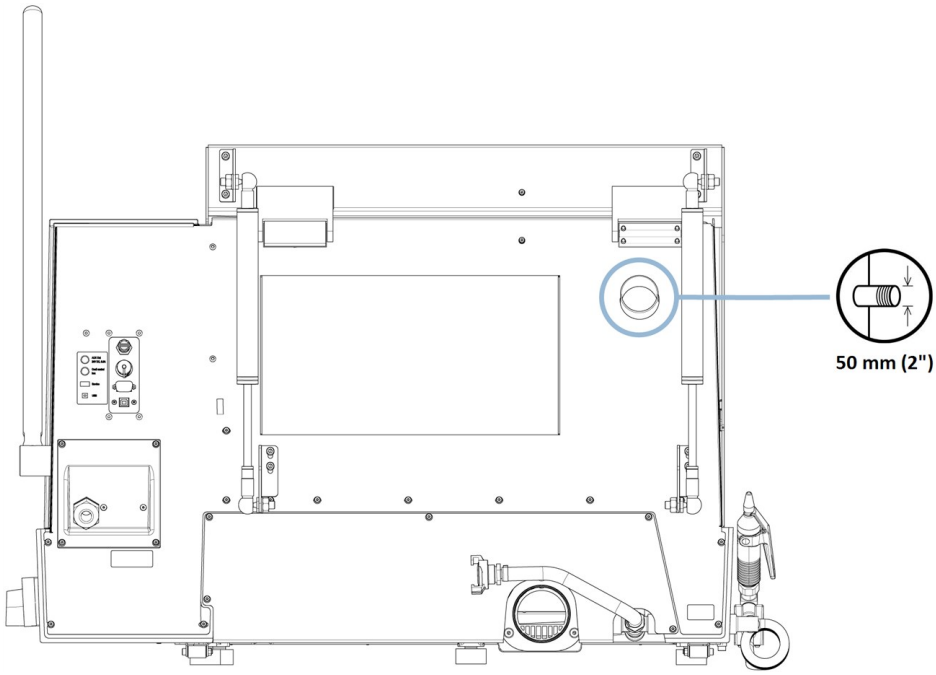

- Mount an exhaust hose from your local exhaust system onto the flange (50 mm (2") diameter).

Note
Without an exhaust system, damp air produced by the cutting process can escape from the cutting chamber, and penetrate other areas of the cabinet. This can damage the components and shorten the lifetime of the machine.

5.8 Noise

CAUTION
Prolonged exposure to loud noises may cause permanent damage to a person's hearing.
Use hearing protection if the exposure to noise exceeds the levels set by local regulations.

For information on the sound pressure level value, see this section: Technical data ► 89.

Different materials have different noise characteristics. Decreasing the rotational speed and/or the force with which the cut-off wheel is pressed against the workpiece, will lower the noise. Processing time may increase.

5.9 Vibration

CAUTION
Risk of hand to arm vibration during manual preparation.
Prolonged exposure to vibration may cause discomfort, joint damage or even neurological damage.

For information on the total vibration exposure to hand and arm, see this section: Technical data ► 89.

Manual cutting of workpieces causes vibrations. Take action to lower the vibration where possible; decrease the pressure on the handle or use a vibration-reducing glove.

6 Operate the device

6.1 Change the cut-off wheel

Note
The spindle of the Discotom-100 is a left-hand thread.

Note
To protect the cut-off wheel and flanges, you must place conventional cut-off wheels based on Al_2O_3 or SiC abrasives between two cardboard washers.
For maximum precision with diamond or CBN cut-off wheels, do not use cardboard washers.

1. Use the cutting handle to move the cut-off wheel into the top position and activate the cutting arm brake.
2. Press and hold down the spindle locking knob on the right-hand side of the cut-off wheel, turning the cut-off wheel until the spindle lock engages.
3. Remove the nut with a fork spanner.
4. Remove the flange, cardboard washers and the old cut-off wheel.
5. Mount the new cut-off wheel.
6. Mount the flange and the nut.
7. Tighten carefully and release the locking knob.
8. Release the cutting arm brake.

6.2 Clamp the workpiece

CAUTION
An inadequately clamped workpiece can be propelled and cause damage.
Make sure that the workpiece is securely fixed in a quick-clamping device or similar.

Clamp the workpiece with the clamping device of your choice. For example, a quick clamping device.

1. Place the workpiece between the clamp and the back stop.
2. Push the clamp towards the workpiece and lock the clamp on the quick-clamping device.

Generally, we recommend that you clamp the workpiece as far back on the cutting table as possible.

How to clamp irregular workpieces

You must use special clamping tools to clamp irregular workpieces without flat clamping surfaces. Incorrectly clamped workpieces can move during cutting and damage the cut-off wheel or to the workpiece.

- Use the T-slots to mount the special clamping tools.
- For faster cutting, position the workpiece so that the cut-off wheel cuts the smallest possible cross-section.

6.3 Position the cutting table

Before you start cutting, position the table with the joystick.

How to cut long workpieces

To cut workpieces that exceed the width of the cutting chamber in the left-hand side:

1. Remove a plate in the cover and replace it with an extension tunnel.
2. Place the workpiece in the extension tunnel and clamp it securely.

6.4 Basic operation

6.4.1 Flushing gun

CAUTION
Avoid skin contact with the coolant additive.

CAUTION
Do not start flushing until the flushing gun points into the cutting chamber.

CAUTION
Only use the flushing gun for cleaning inside the cutting chamber.

CAUTION
Always wear protective gloves and safety goggles when you use the flushing gun.

1. Remove the flushing gun from the holder.
2. Point the gun into the flushing chamber.

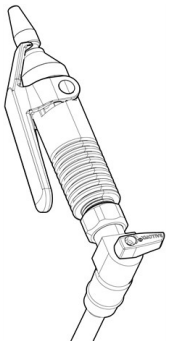

Closed	Open

3. Open the valve on the flushing gun.

> **Hint**
> To avoid water splashing while cleaning, use the valve to reduce the maximum water pressure.

4. Press Flush to start the water pump.

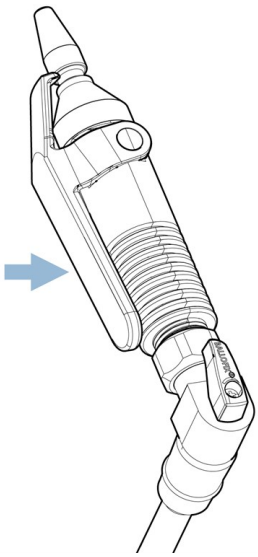

5. Press the trigger and clean the cutting chamber.

6. Press Stop to stop the water pump.
7. Close the valve and place the flushing gun back in the holder.
8. Leave the safety guard open to allow the cutting chamber to dry and to avoid corrosion.

Note
Always place the flushing gun back in its holder when you have finished using it. Do not use the flushing gun to clean the safety guard as this can result in water dripping when the safety guard is open.
We recommend that the flushing gun is operated at a pressure of max. 3 bar.

Hint
For instructions on how to use the flushing gun to clean the machine, see Cutting chamber ► 73.

6.4.2 Cutting table

Y-table

The Y-table is a motor driven, movable table which is used when cutting automatically. Use the joystick to move the table backwards and forwards. See: Control panel functions ► 18.

Note
When you switch the machine on, a pop-up alerts you that the cutting table will move to the front reference position. Press Enter to continue.

6.4.3 Display

The display on the front panel provides different levels of status information. For example, when the machine is switched on using the main power switch, the display informs you about the physical configuration of the machine and the version of software that is installed:

The display is primarily divided into 2 areas. The position of these areas and the information they contain are explained in the illustration below, which uses the **Options** menu as an example:

A Heading: this indicates where you are in the software's hierarchy. An icon will indicate whether the handle is locked or unlocked:

Locked

Unlocked

B Information fields: these will be either numerical values or text fields, providing information associated with the process shown in the heading. The highlighted text shows the cursor position.

To select items in this menu:

1. Turn the knob to select a menu, a method group or a parameter.
2. Push the knob to open or activate the selection.
3. Press Esc to return to the **Main menu**.

Acoustic Signals

When you press a key, a short beep indicates that the command has been accepted, whereas a long beep indicates that the key cannot be activated at the moment. You can switch this sound on or off in **Configuration**, under **Options**.

6.4.4 Edit values

Edit numeric values

1. Turn the knob to select the value you want to change.

2. Push the knob to edit the value. A scroll box appears around the value.

Note
If there are only two options, the pop-up box is not displayed. Pushing the knob (Enter) will toggle between the 2 options.

3. Turn the knob to increase or decrease the numeric value (or to toggle between the two options).
4. Push the knob to accept the new value. If you press Esc, the changes are reversed to the original value.

Edit alphanumeric values

1. Turn the knob to select the text value you want to change.

2. Push the knob to toggle between the 2 options.

> **Note**
> If there are more than two options, a pop-up box is displayed. Turn the knob to select the correct option.

3. Press Esc to accept the option and return to the previous menu, or turn the knob to select and edit other options in the menu.

6.4.5 Software settings

When switching the machine on for the first time, the **Select language** screen will appear. To change the language after this, see Change the language ► 39).

- Select the language you prefer.

You will now be prompted to set the time.

- Use the knob to adjust and accept the settings.

You will now be prompted to set the date.

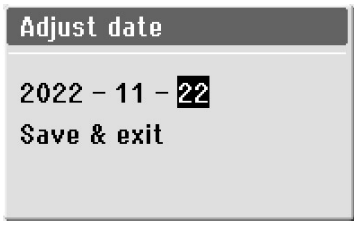

1. Use the knob to adjust and accept the settings.
2. Select **Save & Exit**.

The **Main menu** now appears in the language you have chosen.

When you start the machine, it will open the last screen that was used before it was switched off.

To go to the **Main menu**, press Esc.

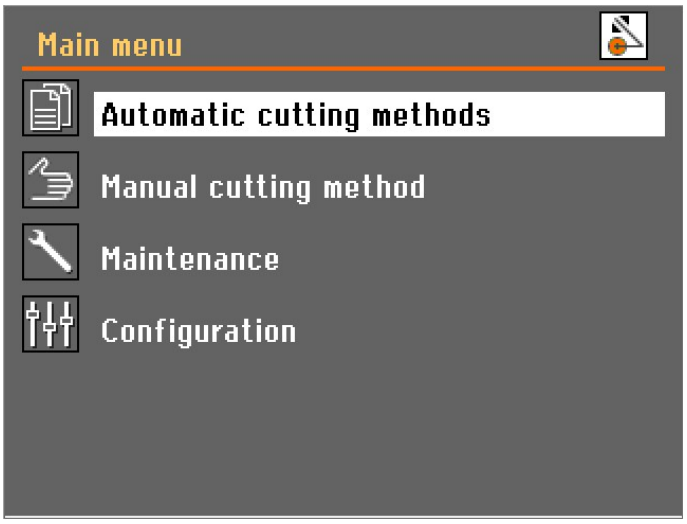

Change the language

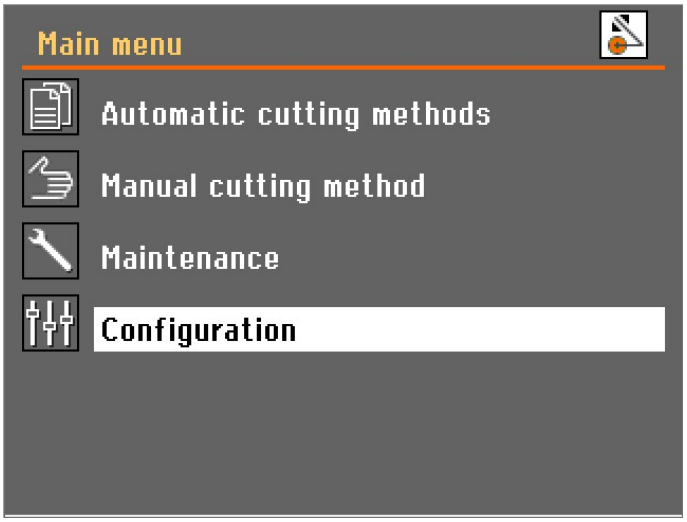

1. Open the **Configuration** menu.

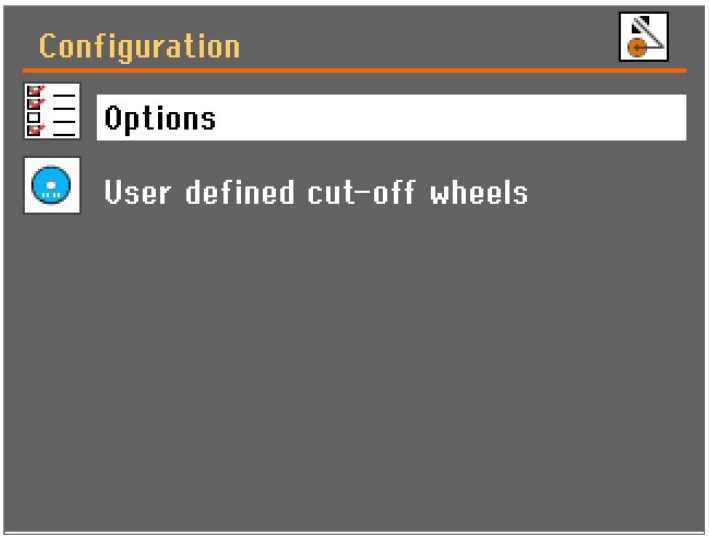

2. Open the **Options** menu.

3. Open the **Language** pop-up menu.

4. Select the language you prefer.

6.4.6 Operation mode

There are 3 different user levels:

Production: Methods can be selected and viewed but no editing is possible.

Development: Methods can be selected, viewed and edited.

Configuration: Methods can be selected, viewed and edited and all functions in **Configuration** are accessible.

Change the operation mode

To change the operation mode:

1. Go to the **Options** menu, under **Configuration**.
2. Select **Operation mode**.
3. Select **Pass code**.

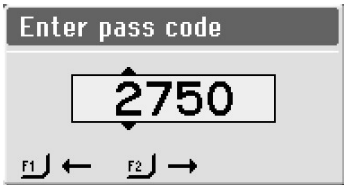

4. Use the F1 and F2 keys to select digits.
5. Turn the knob to change the digits and push knob to enter the pass code.

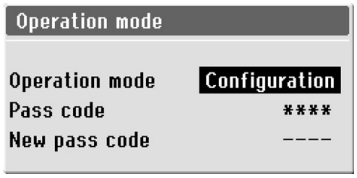

6. Select **Configuration**.

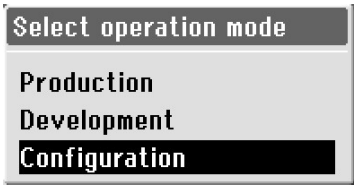

7. Select the desired operation mode.

New pass code

To set a new pass code:

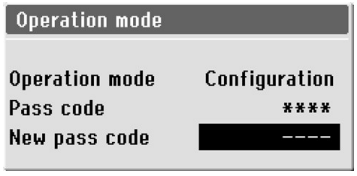

1. Select **New pass code**.
2. Enter the new pass code.

> **Note**
> When a pass code is set, you have 5 attempts to enter the correct pass code, after which the machine will be locked.
> Re-start the machine using the main switch, then enter the correct pass code.

6.4.7 Change the cutting mode and parameters

Cutting display

The cutting display shows two types of information:

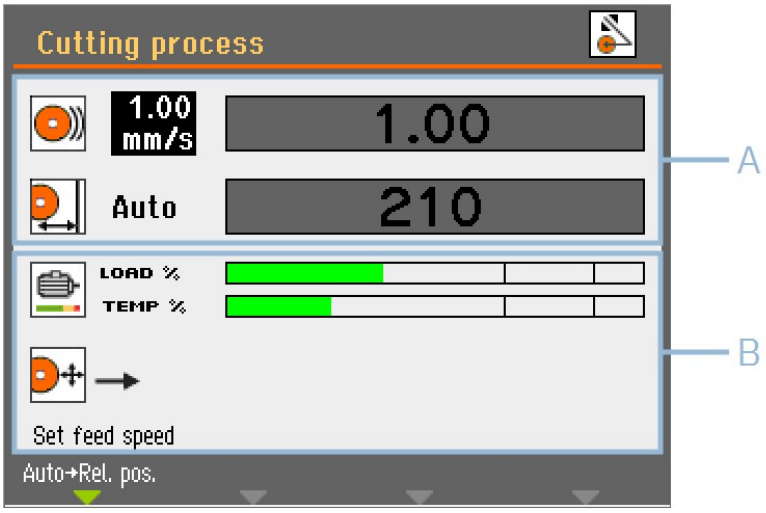

A	Cutting parameters	**B**	Motor information

Cutting parameters

In **Automatic Cutting** mode, the upper area of the display shows information about the cutting parameters:

- **Feed speed**
- **Stop position**

The cutting parameters can be set both before and during cutting.

The set value is displayed to the left of the bar graph. The actual value (during cutting) is displayed inside the bar graph.

Motor information

The bottom area of the display shows the motor information:

- **Load %**: Motor load.
- **Temp %**: Motor temperature.

The values displayed are in relative (%) values.

Change the cutting mode

The Discotom-100 has two cutting modes: **Manual cutting methods**and **Automatic cutting methods**.

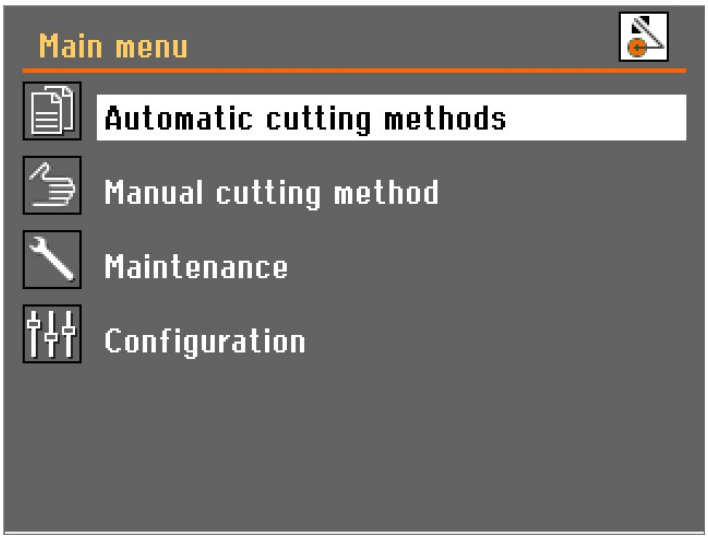

- Select the mode you want to use in the **Main menu**.

Change the cutting parameters

In automatic cutting mode, the machine applies the selected cutting parameter values for:

- **Wheel type**
- **Wheel speed**
- **Cutting mode**
- **Feed speed**
- **MultiCut** (with automatic x-table only)
- **Stop mode**

To adjust the values of these parameters:

1. Use the knob to select a cutting parameter.
2. Turn the knob to change the value of the parameter.
3. Push the knob to store the new value.

Cut-off wheel

To select or change the cut-off wheel:

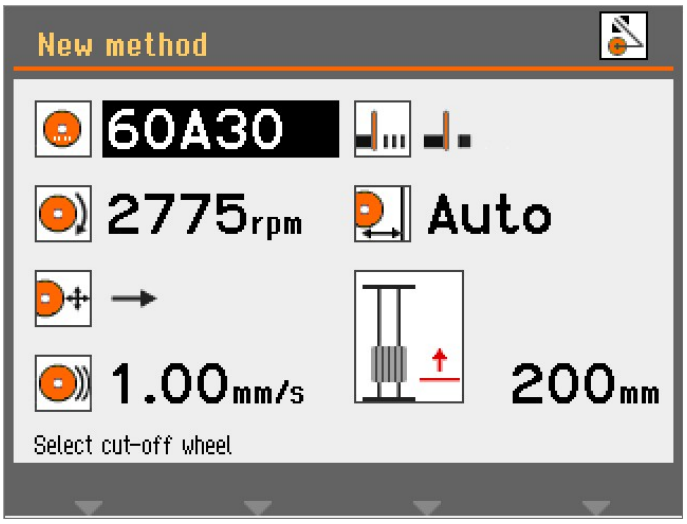

1. Select the **cut-off wheel** parameter.

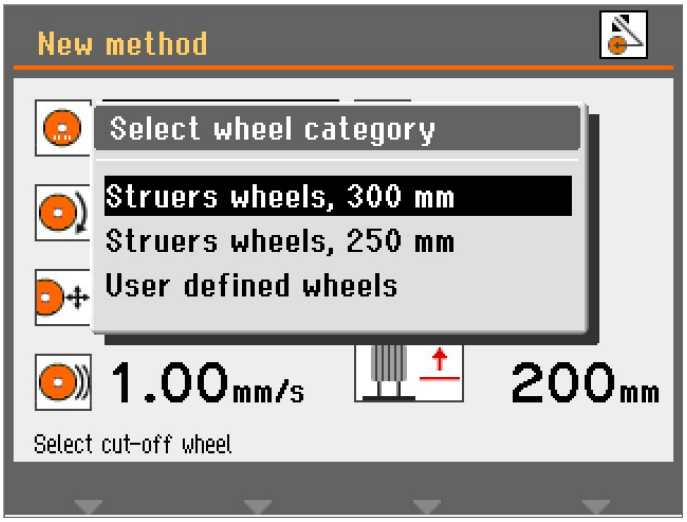

2. Select a wheel category.

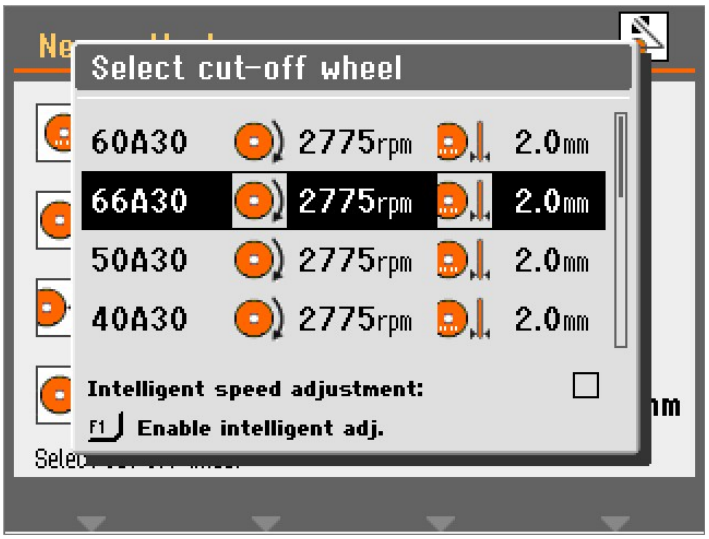

3. Select a cut-off wheel from the list.

The selected cut-off wheel is now displayed, and the rotational speed of the wheel is inserted.

Intelligent speed adjustment

To use the intelligent predefined rpm adjustment:

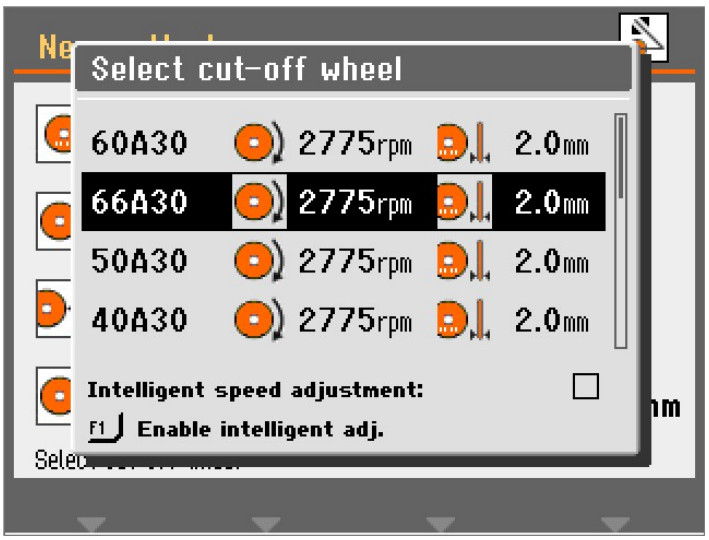

1. Press F1 in the **Select cut-off wheel** menu to enable the intelligent adjustment.

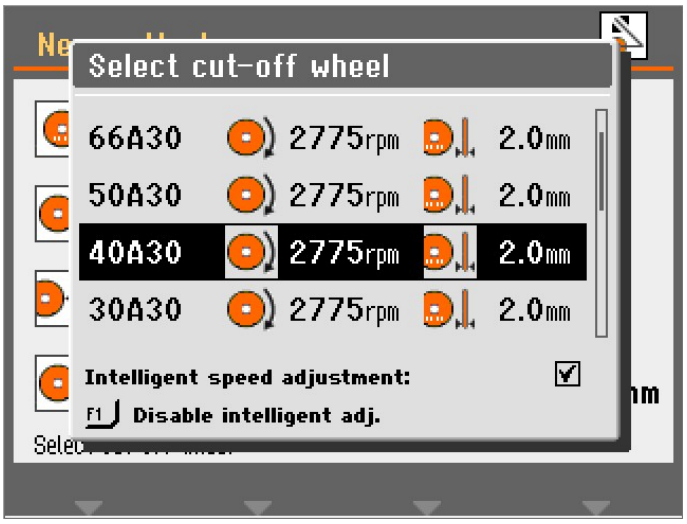

2. Select a cut-off wheel to adjust the rpm.

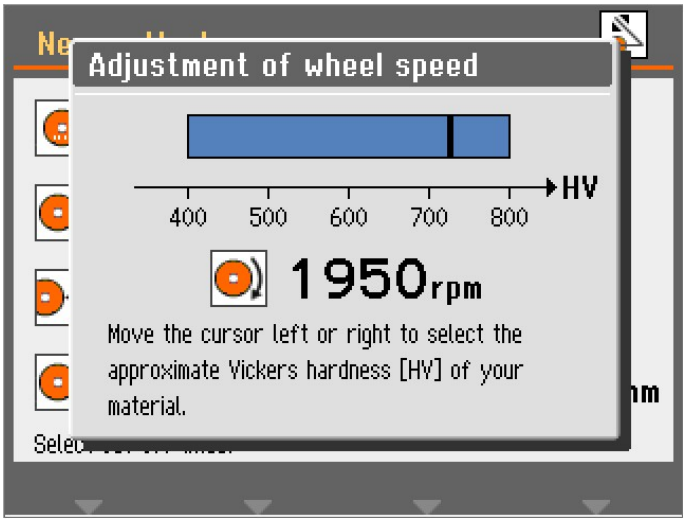

3. Select the Vickers hardness of the material you want to cut. The rpm setting for the cut-off wheel is changed accordingly.

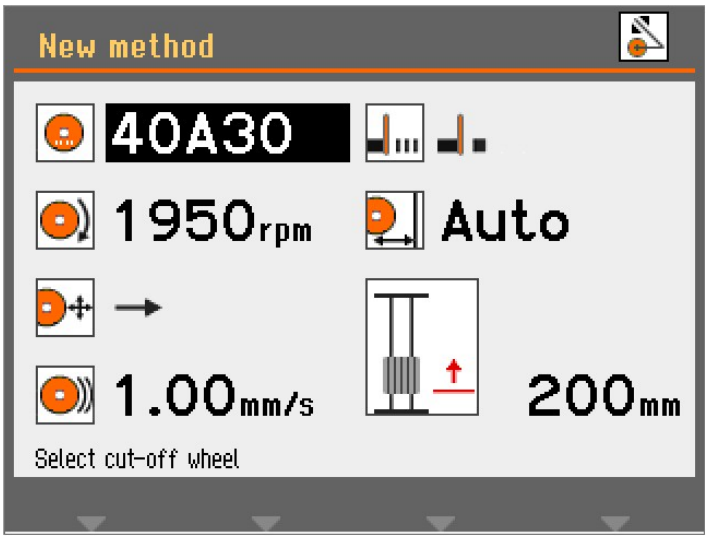

4. Push the knob to store the value.

Wheel speed

To change the cut-off wheel speed:

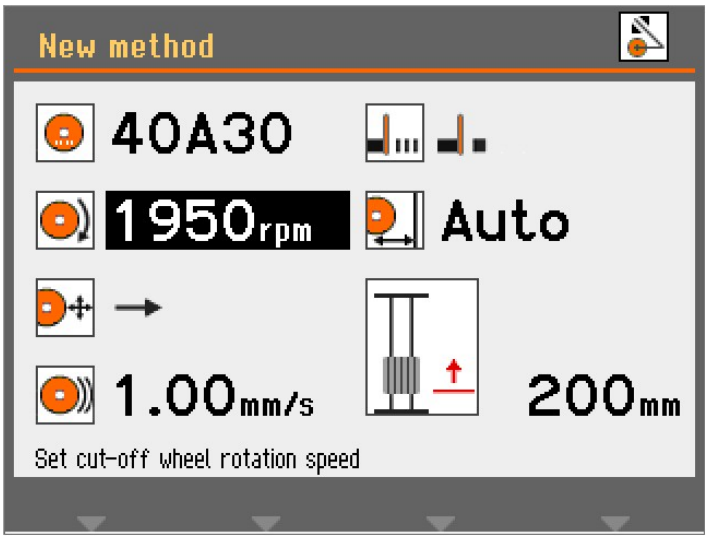

1. Select the speed parameter.

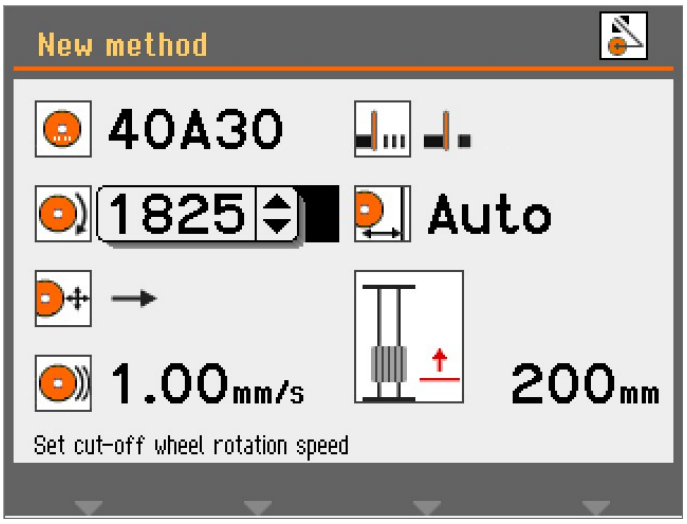

2. Use the knob to adjust the wheel speed (1500 - 3000 rpm).

Cutting mode

To change the cutting mode:

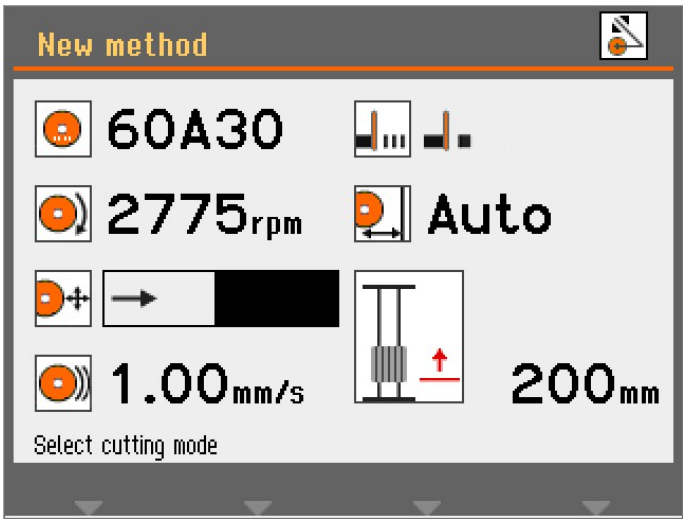

1. Select the cutting mode parameter.

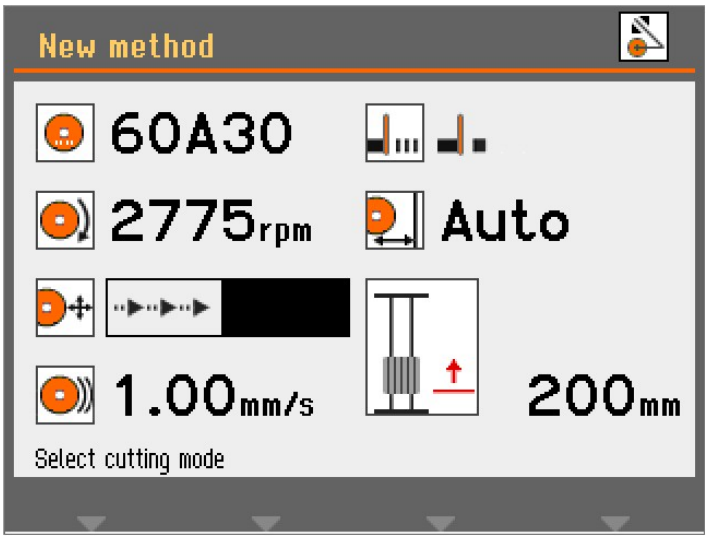

2. Push the knob to change the cutting mode.

Cutting modes	
Direct cutting	Direct cut is the normal and most economic cutting mode and can be used for most cutting operations.
Impact cutting	Impact cutting can be used when it is not possible to find the correct cut-off wheel for a specific material, and the abraded material clogs the wheel, or the wheel is not wearing enough. Impact cutting will frequently accelerate the cutting table and thus move the workpiece at higher speed against the cut-off wheel. This will break down the wheel and release fresh and sharp abrasive grains that can work properly. Impact cutting can result in higher wheel wear, but will reduce the risk of overheating the workpiece that otherwise can take place with an inaccurate wheel / material combination.

Feed speed

To set the feed speed:

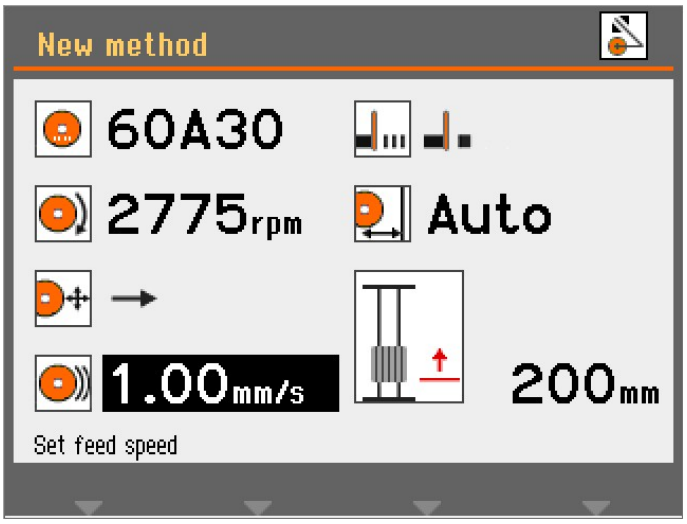

1. Select the feed speed parameter.

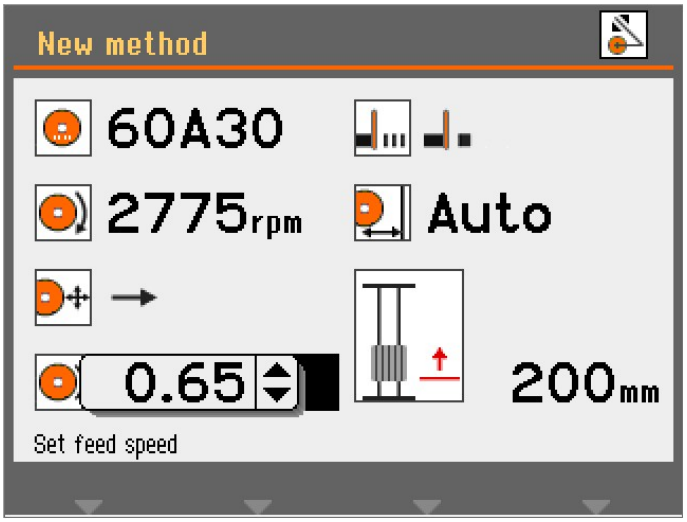

2. Use the knob to adjust and accept the settings.

MultiCut (Optional)

To select the **MultiCut** mode:

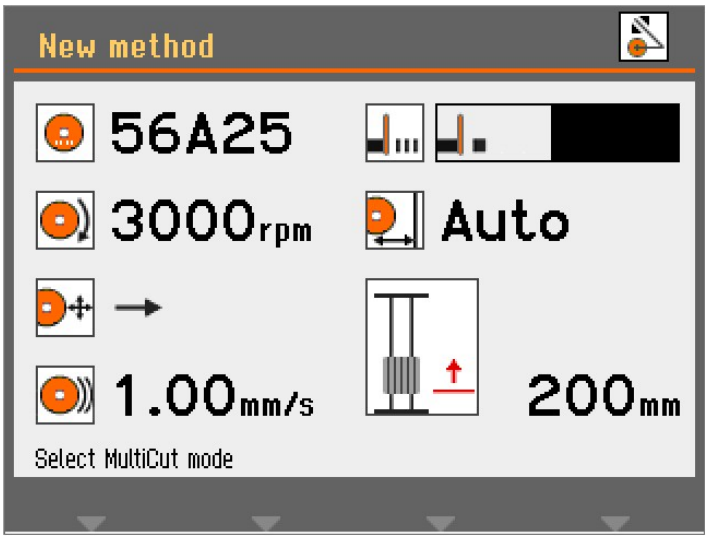

1. Select the **MultiCut** parameter.

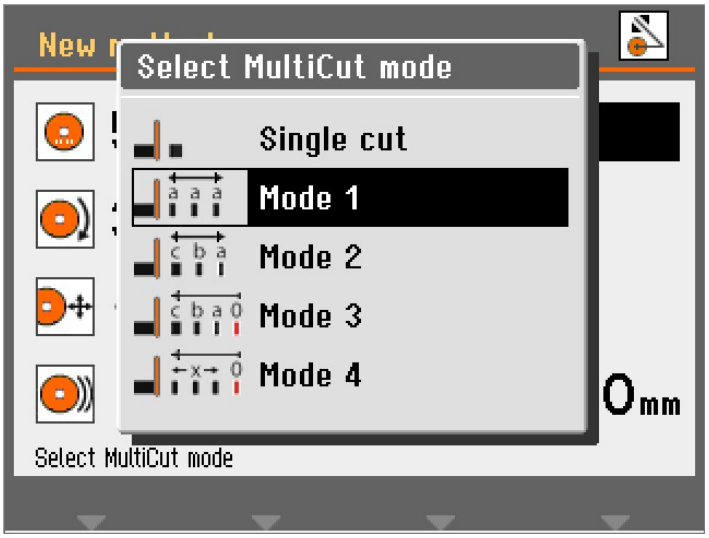

2. Select the desired setting.

MultiCut modes		
	Single cut	Off
	Mode 1	Cut up to 10 slices of equal thickness
	Mode 2	Cut up to 10 slices of varying thickness
	Mode 3	Cut up to 10 slices of varying thickness counted from a common 0-position

MultiCut modes	
Mode 4	The thickness of the cuts are set by moving the joystick then pressing Enter to set the position of the cut

MultiCut 1

With the **MultiCut 1** mode, you can cut up to 10 samples of equal width.

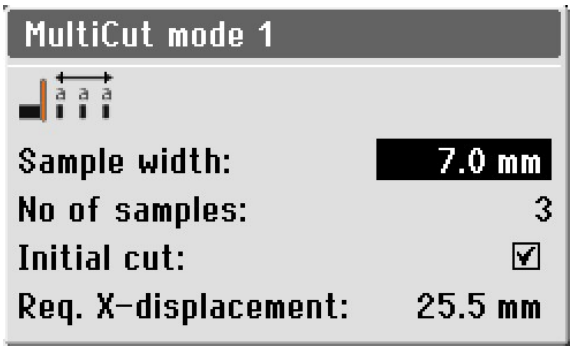

Parameters	
Sample width	Sets the width of the samples that will be cut.
No of samples	Sets the number of samples that will be cut.
Initial cut	Select this parameter if you need to make an initial cut, before you start cutting the samples. This cuts a scrap sample, which you will not use. For example, if the workpiece has an uneven edge that makes it unsuitable as a first sample.
Required X-displacement	This parameter is automatically calculated, and it displays the required movement of the X-table to cut the samples, based on the parameter settings.

MultiCut 2

With the **MultiCut 2** mode, you can cut up to 10 samples of different widths.

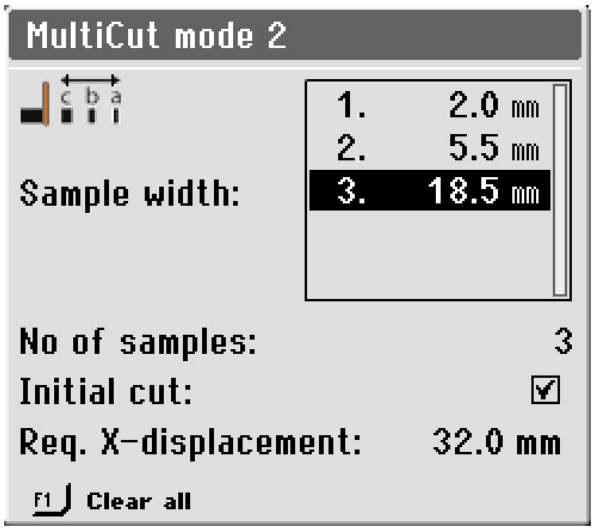

Parameters	
Sample width	Sets the width of the samples that will be cut.
No of samples	Sets the number of samples that will be cut.
Initial cut	Select this parameter if you need to make an initial cut, before you start cutting the samples. This cuts a scrap sample, which you will not use. For example, if the workpiece has an uneven edge that makes it unsuitable as a first sample.
Required X-displacement	This parameter is automatically calculated, and it displays the required movement of the X-table to cut the samples, based on the parameter settings.

Hint
Press F1 to clear all sample values and return the menu to its default.

MultiCut 3

With the **MultiCut 3** mode, you can cut up to 10 samples at different relative distances from the zero, or starting position.

The distances are manually entered.

To set up the distances:

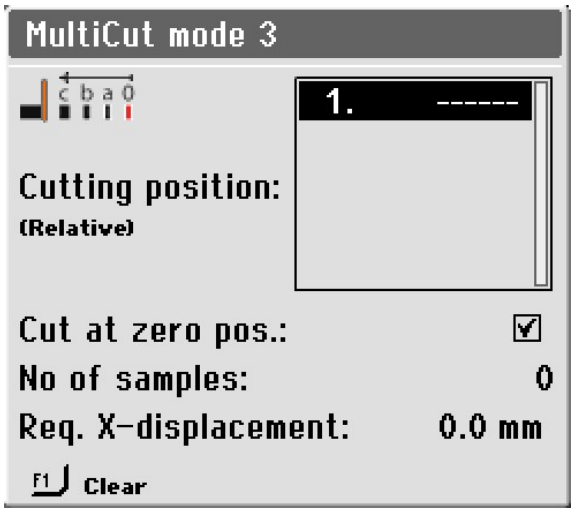

1. Select **Mode3** in the **Select MultiCut mode** menu.

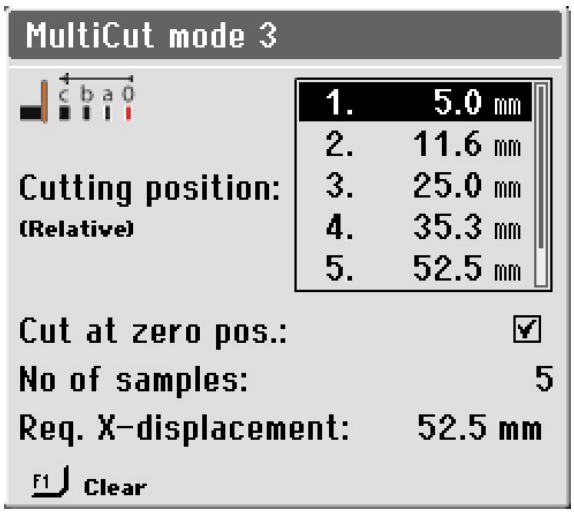

2. Select the cutting positions.

Parameters	
Cutting position (Relative)	This parameter sets the position of the cuts. The values show the relative distance to the zero position.
Cut at zero position	Select this parameter to make an initial cut at zero position. Otherwise, the machine will start cutting at position 1.
No of samples	Sets the number of samples that will be cut.
Required X-displacement	This parameter is automatically calculated, and it displays the required movement of the X-table to cut the samples, based on the parameter settings.

Hint
Press F1 to clear the highlighted value in this menu.
If the cursor is placed outside the cutting position box, F1 will clear all positions.

MultiCut 4

With the **MultiCut 4** mode, you can cut at different relative distances from the zero, or starting position. Enter the distances by using the X-table to position the workpiece in front of the cut-off wheel, where you want to cut the sample, and then record this position.

To set up the distances:

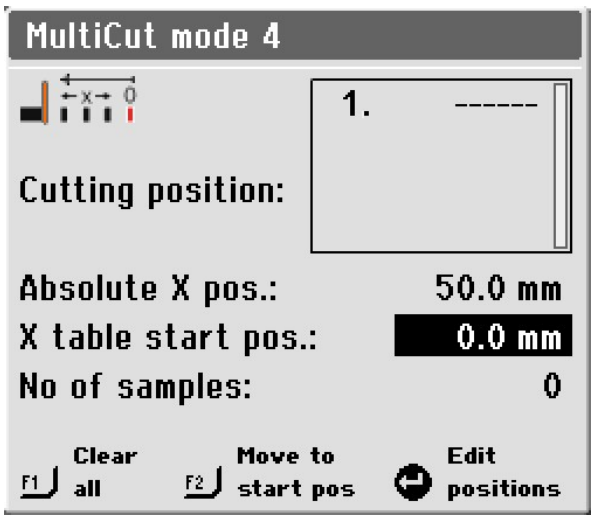

1. Position the workpiece relatively close to the cut-off wheel and clamp it.
2. Use the joystick to move the X-table to the position where the first cut is to be made.

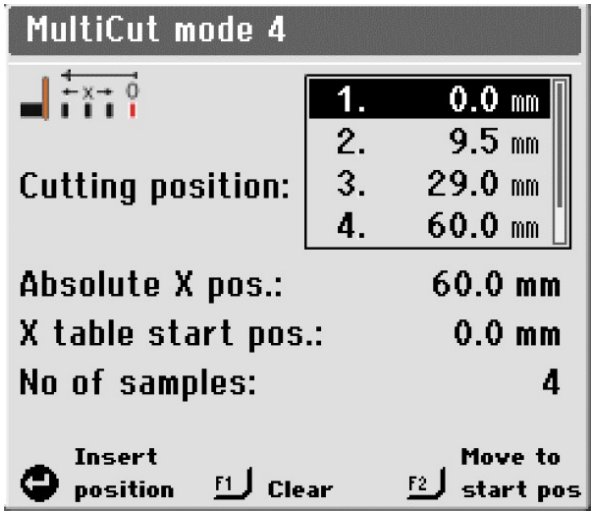

3. Push the knob to insert the current position as the cutting position.
4. Repeat the steps to insert the cutting positions for all samples.

Parameters	
Cutting position (Relative)	This parameter sets the position of the cuts. The values show the relative distance to the zero position.
Absolute X position	Actual absolute position of the X-table.
X-table start position	Here you can fine-tune the start position, if the work piece is slightly misaligned during clamping. When you change the value of this parameter, all other positions are corrected accordingly.
No of samples	Sets the number of samples that will be cut.

Hint
Press F1 to clear the highlighted value in this menu.
If the cursor is placed outside the cutting position box, F1 will clear all positions.

Hint
Press F2 to move the X-table until the sample is in the starter position.

6.4.8 Stop modes

To select a stop mode:

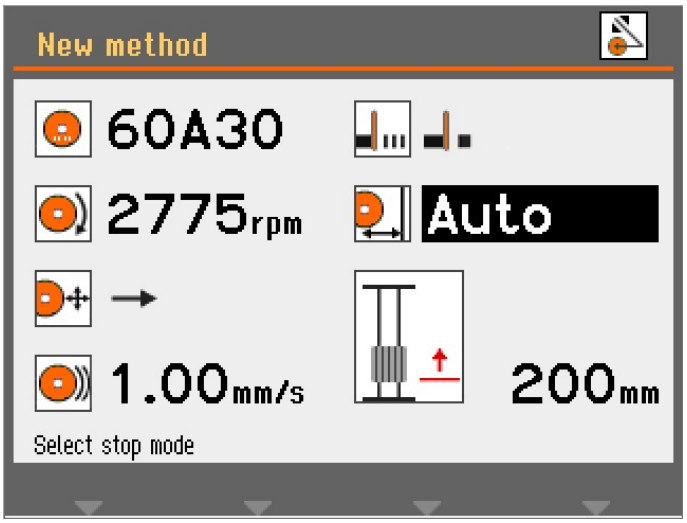

1. Select the stop mode parameter.

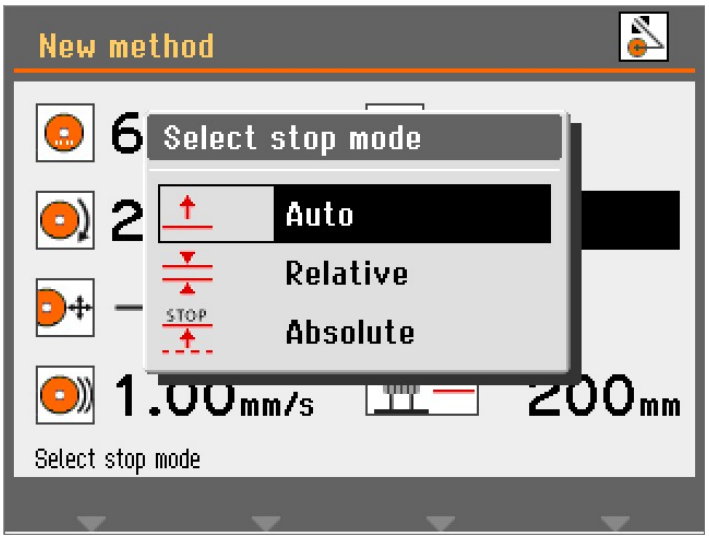

2. Select the desired setting.

The Discotom-100 has 3 stop modes:

- **Auto**
- **Relative**
- **Absolute**

Auto

When **Auto** stop mode is selected, the machine automatically stops when the workpiece has been cut through. We recommend that you use this mode for normal cutting.

> **Note**
> We do not recommend that you use **Auto** stop when cutting tubes, or other workpieces which are not very dense or rigid. Use either **Relative** or **Absolute** stop instead.

The automatic stop function is based on monitoring the electrical current used by the cut-off wheel motor. For the automatic stop to function properly, two criteria have to be met:

- The current used at the start of a cutting operation has to exceed a minimum value. If it does not, the automatic stop will not be enabled.
- The current used during the cutting operation has to remain above a minimum value. When it falls beneath this value, cutting will stop.

In some samples, for example tubes, the current can fall beneath the minimum value when the wall of the tube has been cut through, and the center (hollow part) of the tube is reached during the cutting operation. If this happens, cutting will stop even though the sample has not been fully cut through.

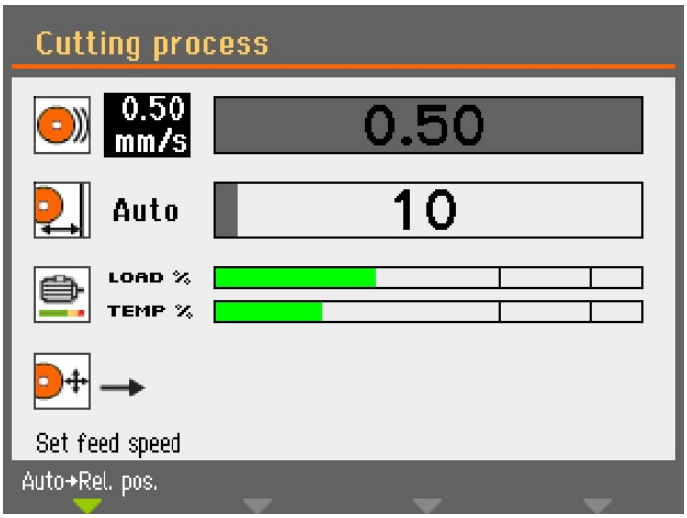

When you start the cutting process, the bar indicating the travel of the cutting table is gray, until the motor current exceeds the required value. The bar then changes to green to signal that the **Auto** mode is enabled.

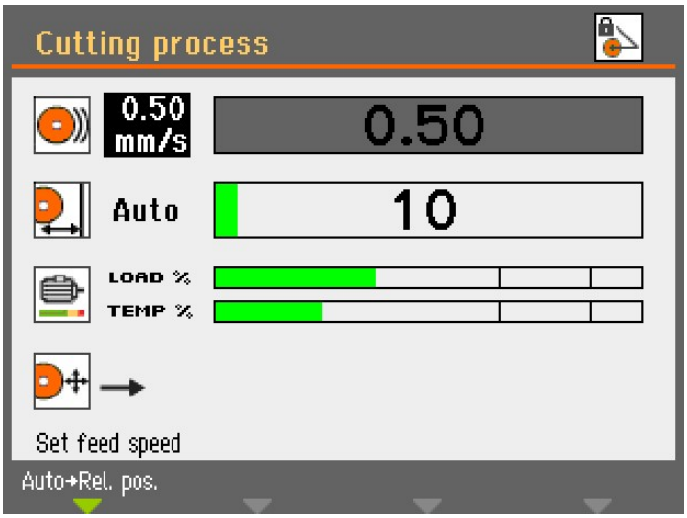

When the motor current then falls below the specified minimum value, the bar color changes back to gray and the cutting stops.

If only a very small cross section is left at the end, cutting can stop before the workpiece is completely cut through. Here it is possible to specify an additional cutting distance in **Configuration** / **Options** to make sure that the workpiece is cut completely through. This is especially useful when using **MultiCut**.

Relative

The Y-table is set to stop in a position relative to where cutting starts. After entering the stop position (approximate sample size + wheel wear) the cutting process will stop as soon as the specified position has been reached. The positioning range (table travel) is 0-200 mm.

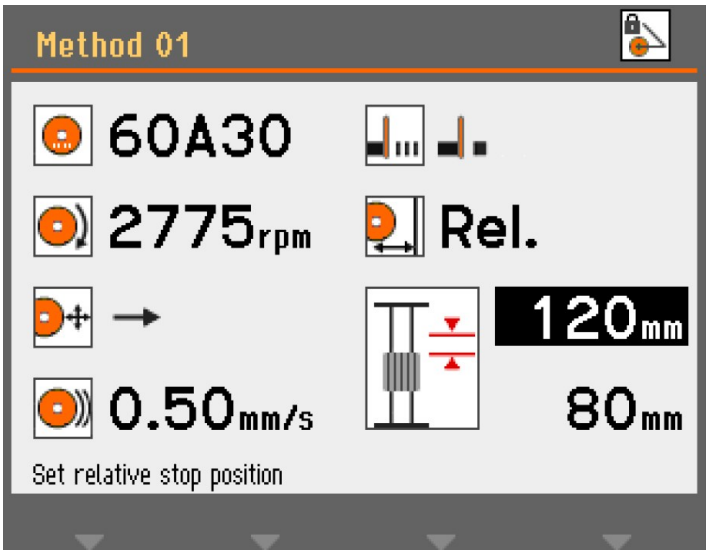

If you set the relative stop position to a value exceeding the possible table travel, the value displayed is reduced automatically to the maximum possible when you press Enter. Moving the Y-table towards the front of the cutting chamber increases the amount of travel and this automatically updates the relative stop data.

Absolute

The Y-table is set to stop in a fixed position measured from the zero position, where the cutting table is at the very front of the cutting chamber. The positioning range is 0-200 mm.

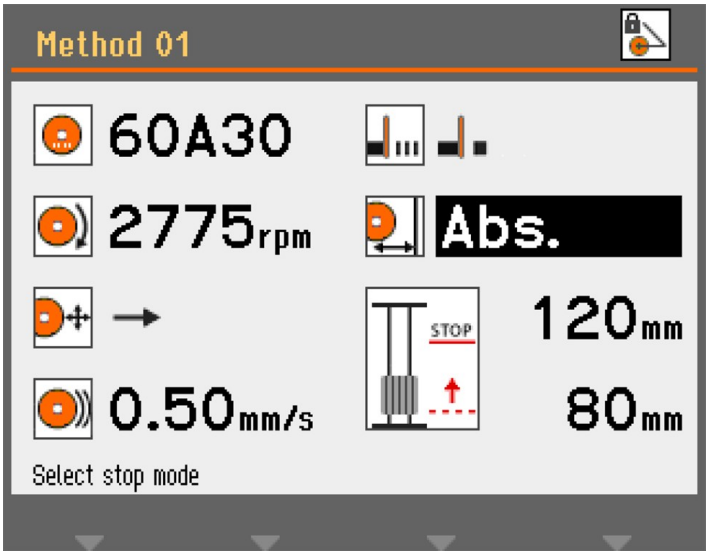

6.4.9 Motor load and temperature display

The motor load and temperature values displayed are relative percentage (%) values.

Manual cutting mode

The **Load %** and **Temp %** displays indicate how much force is being applied to the workpiece and how hot the motor is. As more force is applied, motor load is increased resulting in a higher temperature.

A heavy force applied for an extended period of time can result in the motor's temperature becoming greater than the safe working limit. The machine will then automatically stop cutting to prevent damage to the motor.

Applying heavy force for a long period of time may also shorten the life of the cut-off wheel.

Automatic cutting mode

The feed speed is automatically reduced on overload by the OptiFeed feature.

OptiFeed

This feature protects the machine from damage due to continuous overloading of the motor.

If the feed speed is set too high and the motor is overloaded:

- The feed speed is reduced by 20%.
- If the motor load is still too high, the feed speed is again reduced by 20%.
- This is done up to 4 times until the feed speed is only 20% of the preset value.
- If the motor is still overloaded, the cutting process is stopped.
- If the motor is running with normal load again, the feed speed is gradually increased, in steps of 10% of the original feed speed, until the preset feed speed is reached without the motor being overloaded.

6.4.10 Start the cutting process

WARNING
The machine must not be used for any type of explosive and/or flammable material, or materials which are not stable during machining, heating or pressure.

WARNING: LASER BEAM
Laser radiation. Do not stare into beam or expose users of telescopic optics. Class 2M laser product.

HEAT HAZARD
Wear suitable gloves to protect fingers from abrasives and warm/sharp specimens.

CAUTION
Check that the protective cover is in full working condition prior to cutting.

Automatic cutting	The cut-off wheel is stationary, and the cutting table moves.
Manual cutting	The cutting table is stationary, and the operator moves the cut-off wheel.

Automatic cutting

1. Clamp the workpiece.
2. Release the cutting arm brake.
3. Lower the cut-off wheel by pulling the cutting handle downwards until the cut-off wheel is positioned ready to cut the workpiece.
4. Activate the cutting arm brake.
5. To align workpiece and cutting wheel, press the hold-to-run button and use the joystick to position the cutting table.
6. Close the cover of the machine.
7. Select a method in the **Automatic cutting methods** menu.
8. Press Start. The cut-off wheel starts rotating and the cooling water starts to flow. The cutting table moves towards the cut-off wheel at the preset feed speed.
9. When the workpiece is cut through or the set stop position has been reached, the cut-off wheel stops automatically. Depending on the return position setting, the cutting table will return to where the cutting started (**Start**) or it will stay where it is (**Stay**).

Hint
During cutting, you can move the sample away from the cut-off wheel by pressing the Y-table joystick downwards.

Manual cutting

1. Clamp the workpiece.
2. Release the cutting arm brake.
3. To align the workpiece and cutting wheel, press the Hold-to-run button and use the joystick to position the cutting table.

Hint
Place the workpiece slightly in front of the center of the cut-off wheel.

4. Close the cover of the machine.
5. Select a method in the **Manual cutting methods** menu.
6. Press Start. The cut-off wheel starts rotating and the cooling water starts to flow.
7. Pull the cutting handle down and let the cut-off wheel work itself into the workpiece. Increase the force and begin cutting.
8. Reduce the force when the cut-off wheel has almost cut through the workpiece.
9. When the cut-off wheel has cut through the workpiece, push the cutting handle back to its top position.
10. Press Stop to stop the machine.

Note
When cutting manually, use the motor load information to monitor the force on the workpiece.

Combine manual and automatic operation

To combine the manual and automatic cutting modes:

1. Cut into the workpiece using the **Manual cutting methods**.
2. Press Stop to stop the machine.
3. Activate the cutting arm brake to secure the arm in this position, select a method from **Automatic cutting methods** and continue in automatic mode. The workpiece will move towards the cut-off wheel.

Note
Check that there is a steady flow of cooling fluid from the nozzles.

6.4.11 Stop the cutting process

You can stop the cutting process at any time during the cutting process.

Note
The cut-off wheel may stop rotating if the speed is set to the lowest level.
Do not use this function to stop the cutting process.

Press Stop to stop the cut-off wheel.

6.5 Configuration

6.5.1 Options

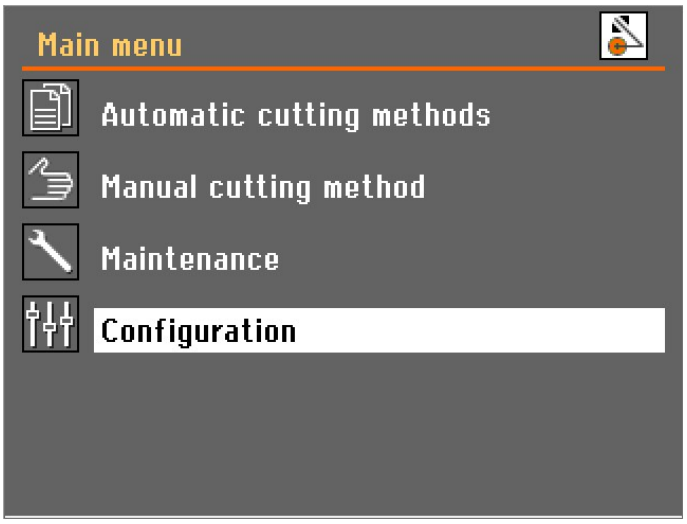

1. Select **Configuration** in the **Main menu**.

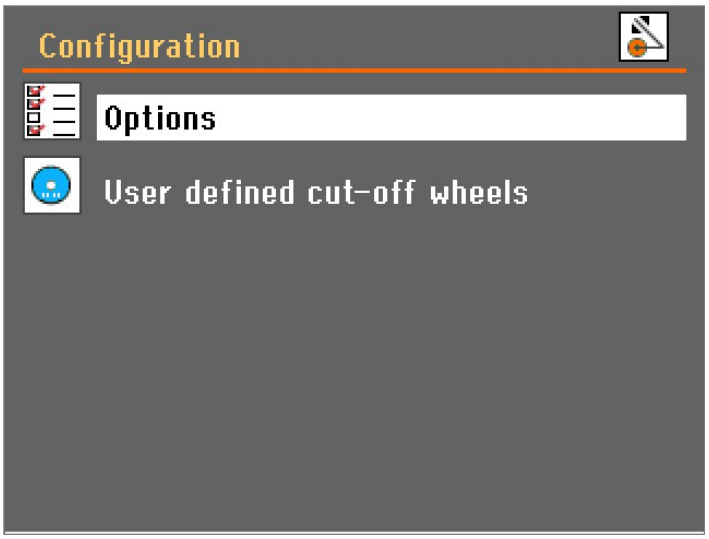

2. Open the **Options** menu.

Parameters	
Display brightness	The contrast settings of the display can be adjusted to suit individual preferences (range 0-100).
Language	The language can be set to English (default), German, French, Spanish, Japanese, Chinese, Italian, Russian or Korean.
Keyboard sound	The keyboard sound can be set to **On** or **Off**. Default: **On**.
Units	The **Feed** and **Stop** values in the display panel can be set to be displayed in either mm (default) or inches.
Time	Set the time to get correct readings from the log files.
Date	Set the date to get correct readings from the log files.

Parameters	
Operation mode	There are 3 different operation modes, which provide different levels of access to parameters: – **Configuration**: Full functionality, access to all parameters. – **Development**: Limited access to parameters in the **Options** menu. – **Production**: No access to parameters except for **Display brightness**, **Keyboard sound**, and **Additional cutting distance**.
Return position	After cutting or after pressing Stop, the return movement of the cut-off wheel can be set to two different modes: – **Start**: The Y-table automatically retracts to the original position when you press Start. – **Stay**: The Y-table will not move after cutting. **Note** Use the **Stay** function for Bakelite bonded diamond or CBN cut-off wheels, as retraction can destroy the rim of the cut-off wheel.
Additional cutting distance	When you use the **Auto** stop, cutting is stopped when the motor current is decreasing below a certain level. When cutting small workpieces with a small cross section, **Auto** stop will stop the cutting process too early due to a very low motor current. In this case, you can specify an additional cutting distance to make sure that the workpiece is cut completely. The additional cutting distance can be specified between 0-25 mm.

6.5.2 User defined cut-off wheels

To set up a new cut-off wheel:

1. Select **New** in the **User defined cut-off wheels** menu.

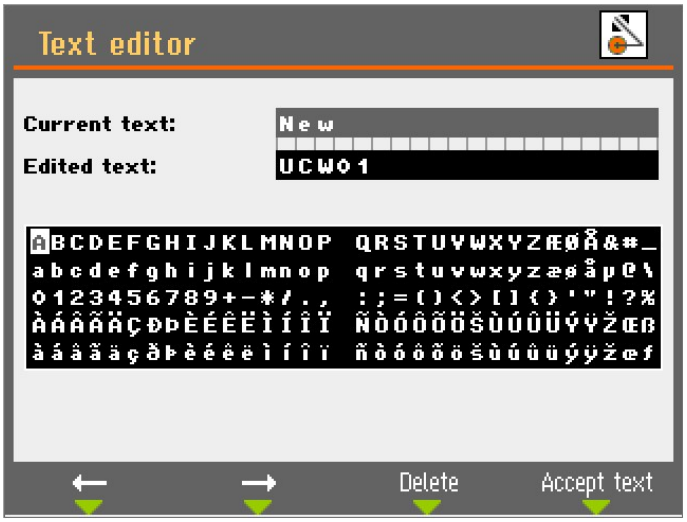

2. Insert a name for the cut-off wheel or press F4 to accept the suggestion (UCW: **User defined cut-off wheels**).

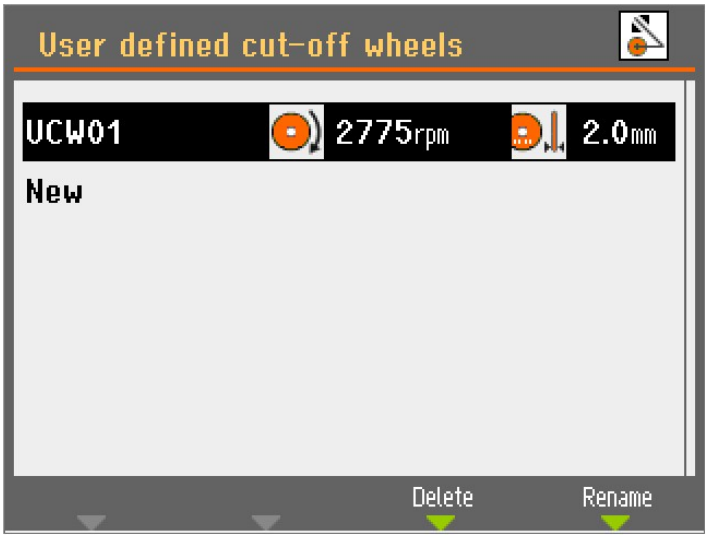

3. Select the newly created cut-off wheel.

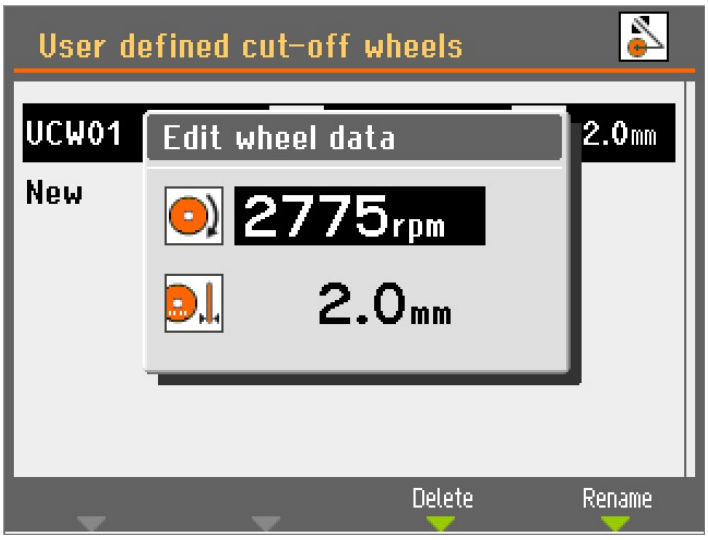

4. Use the knob to adjust and accept the settings.
5. Press Esc to save the changes.

6.5.3 Reset functions

To reset certain functions to factory settings, go to **Reset functions** from the **Maintenance** menu:

Reset methods

Select **Reset methods** to delete all cutting methods at once.

Note
This action cannot be reversed.

Reset configuration

1. Select **Reset configuration** to set all configuration parameters back to their default settings.
2. Restart the machine.
3. Reconfigure the settings.

6.6 Optimize cutting results

Question	Answer	Comments
How can I avoid discoloration or burning of the specimen?	Reduce the rotational speed.	Causes increased wheel wear.
	If reduced rotational speed fails to solve problem, change to a softer cut-off wheel.	
How can I avoid uneven cuts?	Reduce the rotational speed.	Causes increased wheel wear.
	Reduce the feed speed.	
How can I avoid smearing?	Reduce the rotational speed.	Causes increased wheel wear.
How can I avoid burrs?	Use a softer cut-off wheel.	Causes increased wheel wear.
	Secure the workpiece on both sides of the cut-off wheel.	
How can I prevent the cut-off wheel from wearing out too quickly?	Increase the rotational speed.	Can cause specimen discoloration and uneven cuts.
	Use a harder cut-off wheel.	
How can I cut faster?	Place the cut-off wheel as low as possible.	
	Place the workpiece in a position that allows the cut-off wheel to cut the smallest possible cross-section.	
	Increase the feed speed.	Can cause specimen discoloration and uneven cuts.

Question	Answer	Comments
How can I avoid machine vibrations?	For minor vibrations, increase the feed speed in steps of 0.1 m/s	Can cause specimen discoloration and uneven cuts.
	For major vibrations, increase the rotational speed by 500 rpm.	Can cause specimen discoloration and uneven cuts.

7 Maintenance and service

Proper maintenance is required to achieve the maximum up-time and operating lifetime of the machine. Maintenance is important in ensuring continued safe operation of your machine.

The maintenance procedures described in this section must be carried out by skilled or trained personnel.

Safety Related Parts of the Control System (SRP/CS)

For specific safety related parts, see the section "Safety Related Parts of the Control System (SRP/CS)" in the section "Technical data" in this manual.

Technical questions and spare parts

If you have technical questions or when you order spare parts, state serial number and voltage/frequency. The serial number and the voltage are stated on the name plate of the machine.

7.1 General cleaning

Note
Do not use acetone, benzol or similar solvents.

Note
Accumulated dirt and swarf can restrict the movement and cause damage to the cutting table.

Note
Do not use a dry cloth as the surfaces are not scratch resistant.

- Clean the machine and all accessories thoroughly.

If the machine is not to be used for a longer period of time

To ensure a longer lifetime for your machine, we strongly recommend regular cleaning.

7.1.1 Recirculation unit

1. Clean the recirculation tank and the connected tubes thoroughly.
2. If you use a soap solution to clean the bowl or the recirculation tank, rinse with clean water before filling the recirculation tank.

> **Note**
> If the cooling fluid is contaminated by algae or bacteria, replace the cooling fluid immediately.

3. If the recirculation water has been infected with bacteria or algae, clean the tank and tubes with a suitable antibacterial disinfectant.
4. Clean the static filter: Remove it and rinse it with water.

Change the recirculation water

> **CAUTION**
> Avoid skin contact with the coolant additive.

> **Note**
> The recirculation water contains additive and grinding residue and you must not dispose of it into the waste water drain.
> Recirculation water must be disposed of in compliance with local safety regulations.

7.1.2 AxioWash

> **CAUTION**
> Avoid skin contact with the coolant additive.

> **Note**
> Clean the cutting chamber thoroughly if you are not going to use the machine for a longer period of time.

> **Note**
> Only use AxioWash for cleaning the cutting chamber.

> **Note**
> You do not need to remove the cut-off wheel or the clamping tools while using AxioWash.

The AxioWashAxioWash cleaning program is an efficient way to automatically clean the cutting chamber. You can set values between 1-30 min, in steps of 30 seconds. Default value: 3 minutes.

To start the AxioWash function:

1. Remove the workpiece and tools from the cutting chamber.
2. Close the adjustable cleaning nozzles.
3. Close the cover.

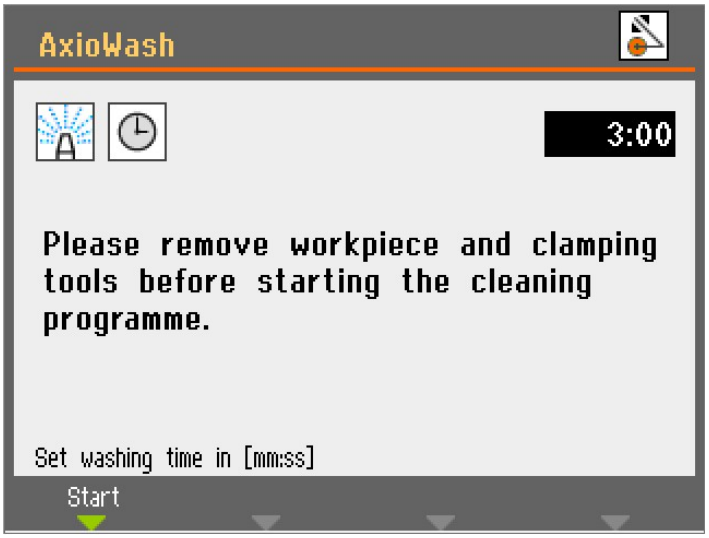

4. Press the AxioWash key on the Control Panel.
5. Press F1 to start cleaning. The AxioWash program will run for the preset time.

7.2 Daily

7.2.1 The machine

Note
Do not use acetone, benzol or similar solvents.

Note
Avoid spraying cooling fluid or water into the safety lock mechanism.

Note
Do not use a dry cloth as the surfaces are not scratch resistant.

Hint
Grease and oil can be removed with ethanol or isopropanol.

- Clean all accessible surfaces with a soft, damp cloth.

- Clean the cutting chamber both automatically (using AxioWash) and then manually (using the flushing gun).

Automatic cleaning: AxioWash

See AxioWash ► 69

Manual cleaning

CAUTION
Avoid skin contact with the coolant additive.

CAUTION
Do not start flushing until the flushing gun points into the cutting chamber.
Only use the flushing gun for cleaning inside the cutting chamber.

CAUTION
Always wear protective gloves and safety goggles when you use the flushing gun.

CAUTION
Using the flushing gun to clean the inside of the protective cover can cause spillage of cooling fluid on the floor.

When AxioWash is finished:

1. Take the flushing gun and point it towards the bottom of the cutting chamber.
2. Open the valve on the flushing gun.
3. Press Flush to start the water pump.
4. Press the button on the rear of the nozzle and clean the cutting chamber thoroughly.
5. Press Stop to stop flushing.
6. Close the valve.
7. Place the flushing gun in the holder.

Note
To avoid corrosion, leave the cover open to let the cutting chamber dry completely.

7.2.2 Protective cover

WARNING
To ensure its intended safety, the PETG screen must be replaced every 5 years.
A label on the screen indicates when it is due to be replaced.
Replacement of the screen is required to remain compliant with the safety requirements in the European standard EN 16089.

WARNING
Replace the cover screen immediately if it has been weakened by collisions with projectile objects or if there are visible signs of deterioration or damage.

WARNING
If any of the following checks fail, do not use the machine until problems are resolved.

CAUTION
The protective cover will minimize the risk of ejection but will not eliminate it completely.

The protective cover consists of a metal frame and a composite material (PETG) screen that protects the operator. In the event of damage, the screen will be weakened and offer less protection.

- Visually inspect the cover and the screen for signs of deterioration, wear or damage (for example: dents, cracks, damage to the edge sealing).

7.2.3 Wheel guard

Visually inspect that the cut-off wheel guard is intact.

7.2.4 Safety lock

The interlock tongue must be checked regularly for damage and perfect fitting.

- Check the interlock tongue for correct function. It must slide unobstructed into the locking mechanism.

7.2.5 Clean the flushing gun nozzle

The flushing gun nozzle can collect swarf, inhibiting the flow of cooling fluid.

When necessary:

- Unscrew the nozzle head and rinse it under clean water.

7.3 Weekly

7.3.1 The machine

Clean the machine regularly to avoid damaging effects to the machine and the specimens from abrasive grains or metal particles.

- Clean painted surfaces, and the control panel with a soft damp cloth and common household detergents. For heavy duty cleaning, use Struers Cleaner.
- Clean the cover with a soft damp cloth and a common household anti-static window cleaning agent.
- Do not use harsh or abrasive cleaning agents.

Note
Make sure that no detergent or cleaning agent is flushed into the cooling unit tank, as this will cause excess foaming.

7.3.2 Cutting chamber

Clean the cutting table

1. Remove the clamping device(s).
2. Thoroughly clean the clamping device(s).
3. Store the clamping device(s) in a dry place or replace on the cutting table after cleaning.

Clean the cutting chamber thoroughly

1. Move the cutting table forwards and backwards to access the whole of the cutting chamber.
2. Clean along the length of the guide shafts with the flushing gun and a brush to remove accumulated swarf.
3. Clean under the cutting table with the flushing gun and a brush to remove accumulated swarf.
4. Wipe the gutter on the inside of the cutting-chamber cover and remove accumulated swarf.

7.3.3 Recirculation unit

- Check the level of the cooling water after 8 hours of use or at least every week.
- Check, and if necessary, clean the filters.

7.4 Monthly

7.4.1 Cooling fluid

CAUTION
Wear suitable gloves and safety goggles when handling coolant.

Replace the coolant at least once a month.

7.4.2 Lubricate the cutting table

Lubricate the cutting table at regular intervals (approximately every 100 hours) to maintain optimum performance of the machine.

1. Move the cutting table to its position using the hold-to-run button and the joystick.

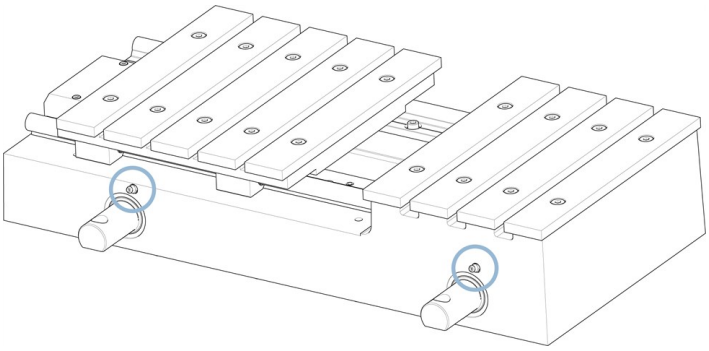

2. Place the grease gun on the grease nipples in front of the spindle for the cutting table and push twice to grease the guide shafts.

A grease gun with grease for lubricating the table spindle is supplied with the machine. When all the grease has been used, refill the grease gun.

7.4.3 Clamping devices

We recommended that you thoroughly clean and lubricate the quick clamping device and vertical quick clamping device at regular intervals.

7.5 Annually

7.5.1 Test the safety devices

WARNING
Do not use the machine with defective safety devices.
Contact Struers Service.

Note
Testing should always be performed by a qualified technician (electromechanical, electronic, mechanical, pneumatic, etc.).

The safety devices must be tested at least once a year.

The cover has a safety switch system to prevent the cut-off wheel from starting while the cover is open.

Cutting table and arm movements are blocked if the protective cover is open. You can use the hold-to-run button to move the position of the cutting table. A locking mechanism prevents the operator from opening the cover until the cut-off wheel stops spinning.

Emergency stop

Test 1

1. Start a cutting process.
2. Activate the emergency stop.

   If the cutting process does not stop, press Stop and contact Struers Service.

Test 2

1. Activate the emergency stop.
2. Press Start.

   If the cutting process starts, press Stop and contact Struers Service.

Protective cover

Test 1

1. Start a cutting process.
2. Try to open the protective cover – do not use force.

   If the cover opens, press Stop and contact Struers Service.

Test 2

1. Open the cover.
2. Press Start.

   If the cutting process starts, press Stop and contact Struers Service.

Test 3

1. Start a cutting process.
2. Press Stop.

   If it is possible to open the cover while the cut-off wheel still rotates, contact Struers Service.

Cover interlock

- Check the safety-catch for correct function. The safety-catch must slide unobstructed into the locking mechanism. If it does not, call Struers Service.

Cooling system

Test 1

1. Open the cover.
2. Start the water pump and activate the flushing gun.

   If coolant starts to flow from the cut-off wheel guard, press Stop and contact Struers Service.

Test 2

1. Activate the emergency stop.
2. Start the water pump by releasing the flushing gun.

   If coolant starts to flow, press Stop and contact Struers Service.

Hold-to-run button

1. Open the cover.

2. Without pressing the hold-to-run button, use the joystick to move the cutting table and/or cutting arm.

   If the cutting table and/or the cutting arm move, contact Struers Service.

7.6 Cutting table

The stainless steel bands are available as spare parts and must be replaced if they become worn or damaged.

We recommend that you leave the cover open when the machine is not in use to allow humidity to escape from the cutting table and chamber.

Lubrication

Lubricate the cutting table at regular intervals (approximately every 100 hours) to maintain optimum performance of the machine. See Lubricate the cutting table ► 73.

7.7 Cut-off wheels

How to store bakelite bonded Al_2O_3 cut-off wheels

Bakelite bonded cut-off wheels are sensitive to humidity. Therefore, do not mix new, dry cut-off wheels with used damp ones. Store the cut-off wheels in a dry place, horizontally on a flat support.

Maintenance of diamond and CBN cut-off wheels

Follow these instructions to maintain the precision and the quality of the cut of diamond and CBN cut-off wheels:

- Never expose the cut-off wheel to a heavy mechanical load, or heat.
- Store the cut-off wheel in a dry place, horizontally on a flat support, preferably under light pressure.
- Clean and dry the cut-off wheel before storing to avoid corrosion.
- Use ordinary detergents to clean the cut-off wheel.
- A clean and dry cut-off wheel does not corrode. Therefore, clean and dry the cut-off wheel before storing. If possible, use ordinary detergents for the cleaning.
- Dress the cut-off wheel regularly.

8 Spare parts

For specific safety related parts, see the section "Safety Related Parts of the Control System (SRP/CS)" in the section "Technical data" in this manual.

Technical questions and spare parts

If you have technical questions or when you order spare parts, state the serial number and the year of production. This information is stated in the name plate on the machine.

For further information, or to check the availability of spare parts, contact Struers Service. Contact information is available on Struers.com.

9 Safety Related Parts of the Control System (SRP/CS)

WARNING
The PETG screen must be replaced after a lifetime of 5 years. A label on the screen indicates when it is due to be replaced.
The gas springs for the cover must be replaced after a lifetime of 1 year and 7 months.

WARNING
Safety critical components must be replaced after a maximum lifetime of 20 years.
Contact Struers Service.

Note
SRP/CS (safety-related parts of a control system) are parts that have an influence on safe operation of the machine.

Note
Replacement of safety critical components must only be performed by a Struers engineer or a qualified technician (electromechanical, electronic, mechanical, pneumatic, etc.).
Safety critical components must only be replaced by components with at least the same safety level.
Contact Struers Service.

Safety related part	Manufacturer/Manufacturer description	Manufacturer catalog no.	Electrical ref.	Struers catalog no.
Emergency stop, Push button 22 mm	Schlegel	Rondex type RV	S1	2SA10400
Emergency stop switch element	Schlegel	Rondex type MTO	-S1	2SB10071
Safety relay	Omron	G9SB-3012-A	-KS1 and -KS2	2KS10006

Safety related part	Manufacturer/Manufacturer description	Manufacturer catalog no.	Electrical ref.	Struers catalog no.
Interlock w. locking	Schmersal	AZM161SK-12/12RK-024	-YS1	2SS00121
Safety sensor	Schmersal	BNS 120-02Z	-SS1	2SS00130
Hold-to-run button	Schurter	3-145-878	-S2	2SA00024
Solenoid valve	Sirai	D132A22 G½x9 2F	-Y1 and -Y2	2YM10132
Frequency inverter 380-480 V/50-60 Hz)	Omron	3G3MX2-A4055E-EV2	-A1	2PU04055
Frequency inverter 200-240 V/50-60 Hz)	Omron	3G3MX2-A4055E-EV2	-A1	2PU02055
PCB (Printed circuit board)	Struers		-A3	16013000

10 In-line filter

To clean the in-line filter:

1. Unscrew the filter housing.
2. Clean the filter.
3. Re-assemble the filter.

Hint
You can also fit the in-line filter to the quick coupling on the recirculation cooling unit pump. Make sure that the in-line filter is mounted so that the flow arrows indicate the flow of water towards the cut-off machine.

11 Service and repair

We recommend that a regular service check be carried out yearly or after every 1500 hours of use.

When the machine is started up, the display shows information about total operation time and the machines service information.

After 1500 hours of operation time, the display will show a message reminding the user that a service check should be scheduled.

Note
Service must only be performed by a qualified technician (electromechanical, electronic, mechanical, pneumatic, etc.).
Contact Struers Service.

11.1 Service information

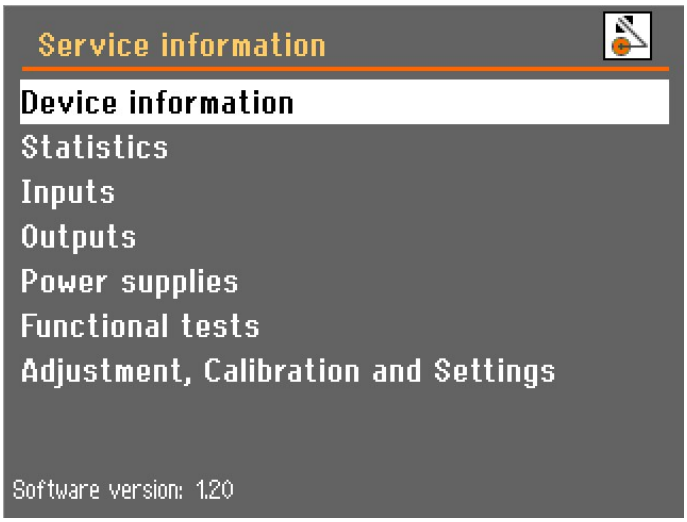

You can find extensive information about the conditions of all different components in the **Service information** menu, located in the **Maintenance** menu.

Various topics can be selected for information on the condition of the different components.

Service information can also be used in cooperation with Struers Service for remote diagnostics of the equipment.

This menu contains read-only information; machine settings cannot be changed or modified.

Note
The Service Information menus are in English only.

A pop-up message appears after 1,000 hours operation time (or a specified number of months) to remind you that a service check must be scheduled. After the 1,500 hours operation time has been exceeded, the pop-up message will change to alert you that the recommended service interval has been exceeded. Contact Struers Service.

12 Disposal

Equipment marked with a WEEE symbol contains electrical and electronic components and must not be disposed of as general waste.

Contact your local authorities for information on the correct method of disposal in accordance with national legislation.

For disposal of consumables and recirculation fluid, follow local regulations.

WARNING
In case of fire, alert bystanders, the fire brigade and cut power. Use a powder fire extinguisher. Do not use water.

Note
The recirculation fluid will contain additive and cutting or grinding swarf.
Do not dispose of the recirculation fluid into a main drain.
Follow the current safety regulations for handling and disposal of swarf and additive for recirculation fluid.

Keep track of which metals you cut or grind and the amount of swarf produced.

Depending on which metals you cut or grind, it is possible that the combination of the metallic swarf from metals with a large difference in electropositivity, can result in exothermic reactions when favorable conditions are present.

Examples:

The following are examples of combinations which can result in exothermic reactions if a large amount of swarf is produced during cutting or grinding on the same machine, and when favorable conditions are present:

- Aluminum and copper.
- Zinc and copper.

13 Troubleshooting

13.1 Machine problems

Error	Cause	Action
The machine has stopped cutting.	The Auto stop function is active.	Switch the machine off and on at the main switch to reset Auto stop.
During cutting, the cutting table stops when reaching a specific point.	The Auto stop function is active.	Switch the machine off and on at the main switch to reset Auto stop.
The chamber light does not work.	Replace the lamp.	Remove the plastic cap to gain access to the fluorescent lamp. Pull out the lamp and replace it.
Water leaking.	Leak in a recirculation cooling unit hose.	Check the hose and tighten the hose clamp.
	Water overflow in the cooling water tank.	Remove the excess water in the tank.
In-line filter needs cleaning often.	Filter tube needs to be changed.	Change the filter tube. In some cases, the In-line filter will require more frequent cleaning. To make this process easier, it can be moved to the quick coupling on the Cooli pump. See In-line filter ► 78.

Error	Cause	Action
The workpieces or the cutting chamber are rusty.	Insufficient additive in cooling fluid.	Use an additive for cooling fluid in the cooling water, at the correct concentration as specified on the label. Check with a refractometer. See Accessories and consumables ► 6.
	The cover is left closed after use.	Leave the cover open to let the cutting chamber dry.
Cutting chamber shows signs of corrosion.	The workpiece is made of copper or a copper alloy.	Use a coolant additive that is specifically formulated for copper and copper alloys.
Forgotten pass code.		Contact Struers Service. It is necessary to revert to the factory settings of the software to regain access to the machine. Note: Stored information and predefined processes will be lost.

13.2 Cutting problems

Error	Cause	Action
Discoloration or burning of the workpiece.	The hardness of the cut-off wheel is inappropriate for the hardness / dimensions of the workpiece.	Reduce the rotational speed or change the cut-off wheel. See Accessories and consumables ► 6.
	Insufficient cooling fluid.	Check that there is enough water in the cooling unit.
Unwanted burrs.	The cut-off wheel is too hard.	Reduce the rotational speed or change the cut-off wheel. See Accessories and consumables ► 6.
	The feed speed is too high at the end of the operation.	Reduce the feed speed near the end of the operation.
	Lack of support for the workpiece.	If possible, support the workpiece on both sides.
The cutting quality differs.	The cooling water hose is clogged.	Clean the cooling water hose and the cooling tube. Check the water flow by turning the cooling valve to cleaning position.

Error	Cause	Action
The cut-off wheel breaks.	The cut-off wheel is mounted incorrectly.	Check that the bore/centre hole has the correct diameter. Check the cardboard washer on both sides of the cut-off wheel and replace them if worn. The nut must be tightened properly.
	The workpiece is clamped incorrectly.	Make sure that only one side of the workpiece is clamped securely. The other side should only be fixed lightly. Use support tools (optional) if the geometry of the workpiece makes support necessary.
	The cut-off wheel is too hard.	Reduce the rotational speed or change the cut-off wheel. See Accessories and consumables ► 6.
	The feed speed is set too high.	Reduce the feed speed.
	Insufficient cooling fluid.	Check that there is enough water in the cooling unit.
The cut-off wheel wears down too quickly.	The rotational speed is too low.	Increase the rotational speed.
	The feed speed is set too high.	Reduce the feed speed.
	Insufficient cooling fluid.	Check that there is enough water in the cooling unit.
The cut-off wheel does not cut through the workpiece.	The rotational speed is too low	Increase the rotational speed.
	The cut-off wheel is too soft for the task.	Select a harder cut-off wheel.
	Incorrect cut-off wheel.	Select and adequate cut-off wheel.
	The cut-off wheel is worn.	Replace the cut-off wheel with a new cut-off wheel.

Error	Cause	Action
The cut-off wheel vibrates during the cutting process.	The workpiece is clamped incorrectly.	Make sure that only one side of the workpiece is clamped securely. The other side should only be fixed lightly. Use support tools (optional) if the geometry of the workpiece makes support necessary.
	The cut-off wheel is too soft for the task.	Select a harder cut-off wheel.
	Not enough cutting force.	Exert more force on the cut-off wheel. **Note**: Large and/or very hard workpieces may require operator strength to cut through.
	The cutting force is too high.	Reduce the force on the cut-off wheel.
	The bearings are worn.	Contact Struers Service.
The workpiece breaks when clamped.	The cut-off wheel gets caught in the workpiece.	Support the workpiece and clamp it on both sides of the cut-off wheel so that the cut stays open.
	The workpiece is brittle.	Place the workpiece between two polystyrene plates. **Note**:Always cut brittle workpieces very carefully.
The sample is corroded.	The sample has been left in the cutting chamber for too long.	Remove the sample directly after cutting. Leave the cover open when you leave the machine.
	Insufficient additive for cooling fluid.	Use an additive for cooling fluid in the cooling water at the correct concentration. Check with a refractometer. See Accessories and consumables ► 6.

13.3 Error messages

Errors must be corrected before operation can be continued. In some cases, the cutting process cannot continue before an authorized technician has rectified the error. Turn the machine off at the main switch immediately. Do not attempt to operate the machine before a technician has rectified the problem.

#	Messages	Cause	Action
4			Do not touch the joystick during power on. Restart the machine. If the error remains, contact Struers Service.
10	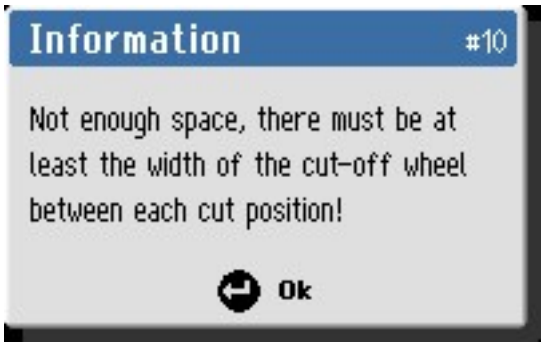		Specify thicker cuts.
20			Press Enter to delete all the methods. **Note**: This action cannot be reversed.
21	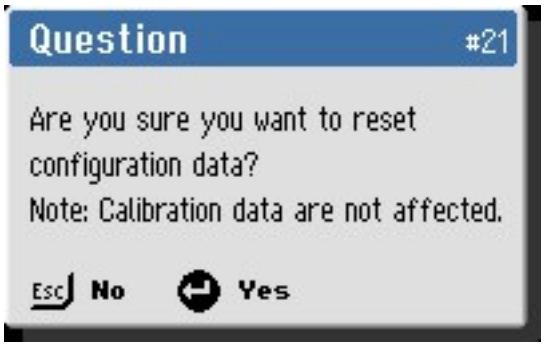		Press Enter to reset the configuration parameters to factory defaults. **Note**: Only parameters from the Option menu are affected.

#	Messages	Cause	Action
34		Cover lock handling software error.	Restart the machine. If the error remains, contact Struers Service.
35		Insufficient water pressure was detected at process start up. or The water pressure sensor or cabling may be defective.	Check the water level and the filters. For some installations, the in-line filter will require more frequent cleaning. To make this process easier, it can be moved to the quick coupling on the Cooli pump. See In-line filter ► 78. Check the water pressure, then press F1 to continue operating. If the error remains after the next restart, contact Struers Service.

#	Messages	Cause	Action
54	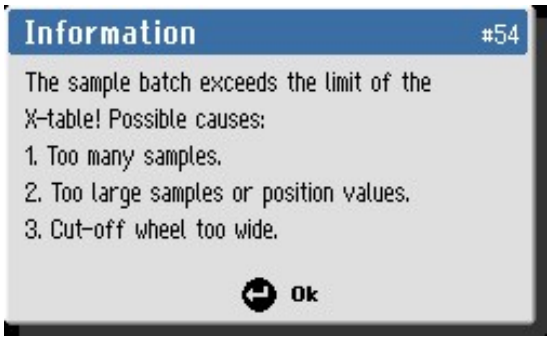	The MultiCut batch parameters require more X-table movement than is available.	Change one of the suggested process parameters, or reposition the X-table.
67	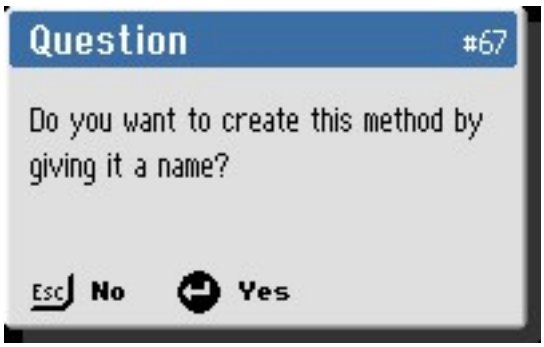	The method selected has not been named.	Press Enter to save and name the method.
69	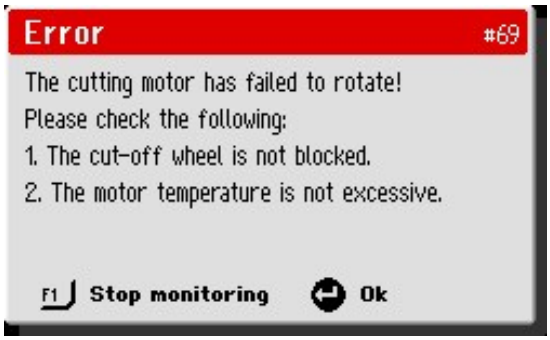	The cutting motor cannot rotate, or rotates slowly when cutting is started.	Clear any obstruction away from the cut-off wheel. Allow the cutting motor to cool. If the error remains after the next restart, contact Struers Service.
77		The emergency stop internal monitoring switch is active, but the Stop button is not pressed as expected.	If the error remains after the next restart, contact Struers Service.

#	Messages	Cause	Action
90	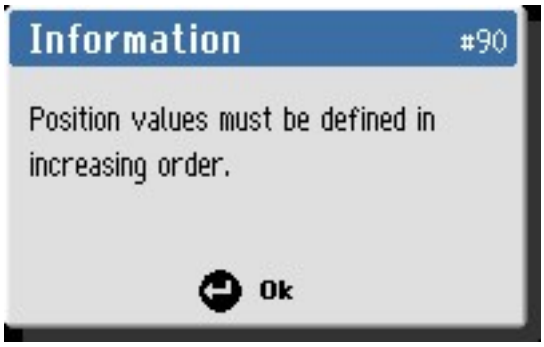	MultiCut 4: the cutting position set has a lower x- position than the previous one.	When you use MultiCut 4, you must set the cutting positions in ascending order.
92		The load on motor is too high.	Decrease the load.
93		The load on motor is too high.	Decrease the load. Allow the cutting motor to cool. If the error remains after the next restart, contact Struers Service.
106		The cover is open and the Hold-to-run button is activated for more than 30 secs without activating the joystick in either x- or y-direction.	Release the button or activate the joystick. If the message is shown without activating the button, there is an error. Contact Struers Service.

#	Messages	Cause	Action
107	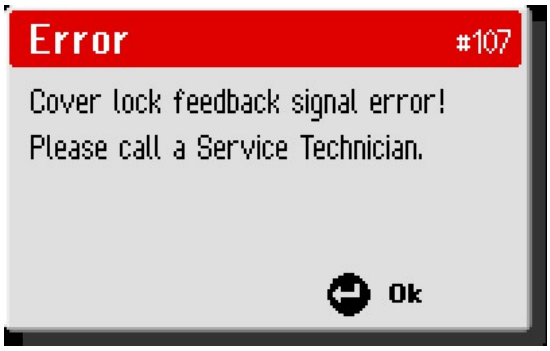		Restart the machine. If the error remains, contact Struers Service.

14 Technical data

14.1 Technical data

Capacity	Height x Length	65 x 160 mm (2.6 x 6.3")
	Diameter	119 mm (4.7")
	Cutting length	195 mm (7.7")
Cut-off wheel	Diameter	300 mm (12")
	Arbor diameter	32 mm (1.26")
Cut-off wheel motor	Rotational speed	1500 - 3000 rpm
	Height adjustment of cut-off wheel	165 mm (6.5")
Cutting table	Width	538 mm (21.2")
	Depth	270 mm (10.6")
	T-slots	10 mm (0.39")
	Max. positioning speed	Y = 20 mm/s (0.8"/s). X = 10 mm/s (0.4"/s)
	Feed speed	0.05 - 2.5 mm/s in 0.05 mm steps (2 - 200 mils/s in 2 mils steps)
Laser		Optional (Laser class up to 2M)
Software and electronics	Controls	Touch pad
	Display	LCD, TFT-color 5.7", 320 x 240 dots with LED back light

Safety standards		CE-labeled according to EU directives
REACH		For information about REACH, contact your local Struers office.
Operating environment	Surrounding temperature	5 - 40°C (41 - 104°F)
	Humidity	35 - 85 % RH non-condensing
Power supply 1	Voltage/frequency	3 x 200 - 240 V / 50 - 60 Hz
	Power inlet	3L + (N) + PE
	Power S1	4 kW (5.4 hp)
	Current, nominal load	16 A
	Current, max.	30 A
	Ampere rating of the largest motor or load	14.7 A
Power supply 2	Voltage/frequency	3 x 380 - 480 V / 50 - 60 Hz
	Power inlet	3L + (N) + PE
	Power S1	4 kW (5.4 hp)
	Current, nominal load	8 A
	Current, max.	15 A
	Ampere rating of the largest motor or load	8.5 A
Cooling system		Cooling system 4
Exhaust	Recommended capacity	50 m^3/h (1766 ft^3/h) at 0 mm (0") water gauge.
Advanced features	X-table, automatic	Yes, size 240 x 270 mm (9.4" x 10.6")
	X-stand, manual	No
	Rotary stand	No

Safety Circuit Performance Level	Emergency stop, Cooling fluid system	PL c
	Emergency stop, Moveable tables	PL c
	Emergency stop, Main motor	PL c
	Work zone guard interlock, Main motor	PL d
	Work zone guard interlock, Moveable tables	PL d
	Unintended start, Cooling fluid system	PL c
	Work zone guard interlock, Locking	PL a
	Hold-to-run, Moveable tables	PL d
Residual Current Circuit Breaker (RCCB)		Type B, 30 mA (or better) is required
Noise level	A-weighted sound emission pressure level at workstations	LpA = 72,6 dB(A), LpC = 91,0 dB(C) (measured value). Uncertainty K = 4 dB (A) Measurements made in accordance with EN ISO 11202
Vibration level	Declared vibration emission	Total vibration exposure to upper parts of the body does not exceed 2.5 m/s².

Dimensions and weight	Width (main body)	92 cm (36.1")
	Width (with handle and flushing gun)	105 cm (41.4")
	Width (one tunnel)	Left: 140 cm (55.1")
	Width (two tunnels)	N/A
	Depth	89 cm (34.9")
	Height (guard closed, handle included)	87 cm (34.2")
	Height (guard open)	108 cm (42.5")
	Weight	204 kg (450 lbs)

14.2 Cutting capacity

The graph shows the projected cutting capacity under the following conditions:

- A new cut-off wheel.
- The workpiece is laid directly on the cutting table, with overhang where appropriate.
- Vertical clamping is used.

Note
The actual cutting capacity depends on the specimen material, cut-off wheel and clamping technique.

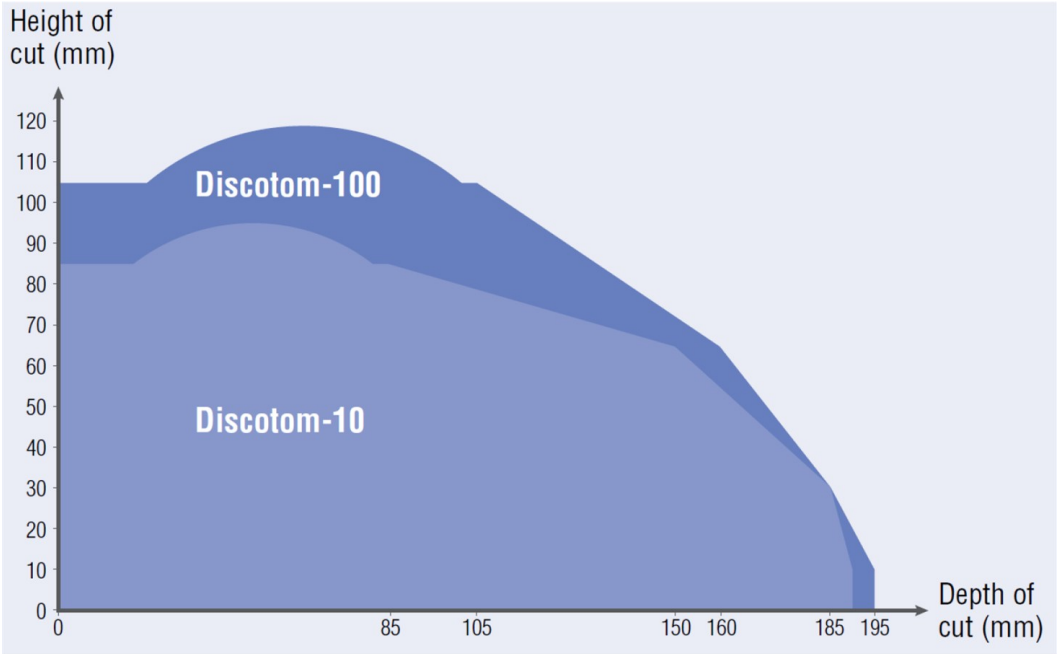

14.3 Diagrams

Note
If you want to view specific information in detail, see the online version of this manual.

Title Discotom-100	No.
Block diagram	16153053 ► 94
Water diagram	16151000 ► 95
Circuit diagram	See the diagram number on the name plate of the equipment, and contact Struers Service via Struers.com.

16153053

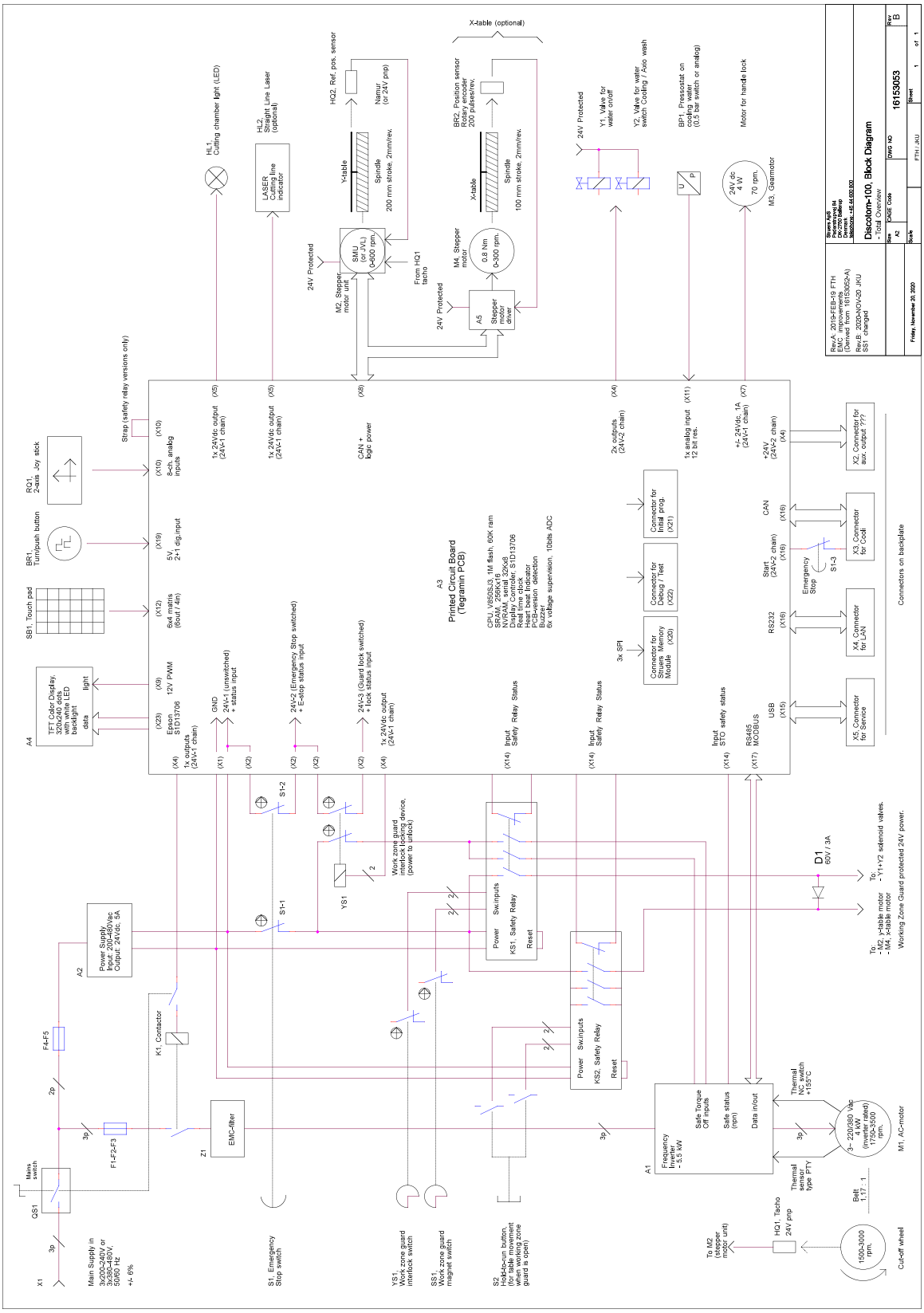
Discotom-100, Block Diagram
- Total Overview
16153053
Rev.A: 2019-FEB-19 FTH
Rev.B: 2020-NOV-20 JKU
Friday, November 20, 2020
Main Supply in 3x200-240V or 3x380-480V, 50/60 Hz +/- 6%
Power Supply Input: 200-480Vac Output: 24Vdc, 5A
Frequency Inverter - 5.5 kW
Safe Torque Off inputs
Safe status (npn)
Data in/out
Power Sw.inputs
KS1, Safety Relay
KS2, Safety Relay
Reset
EMC-filter
Connectors on backplate
Printed Circuit Board (Tegramin PCB)
Connector for Strues Memory Module
Connector for Debug / Test
Connector for Initial prog.
Connector for Aux. output ???
Connector for Cooli
Connector for LAN
Connector for Service
Cut-off wheel
Working Zone Guard protected 24V power.

16151000

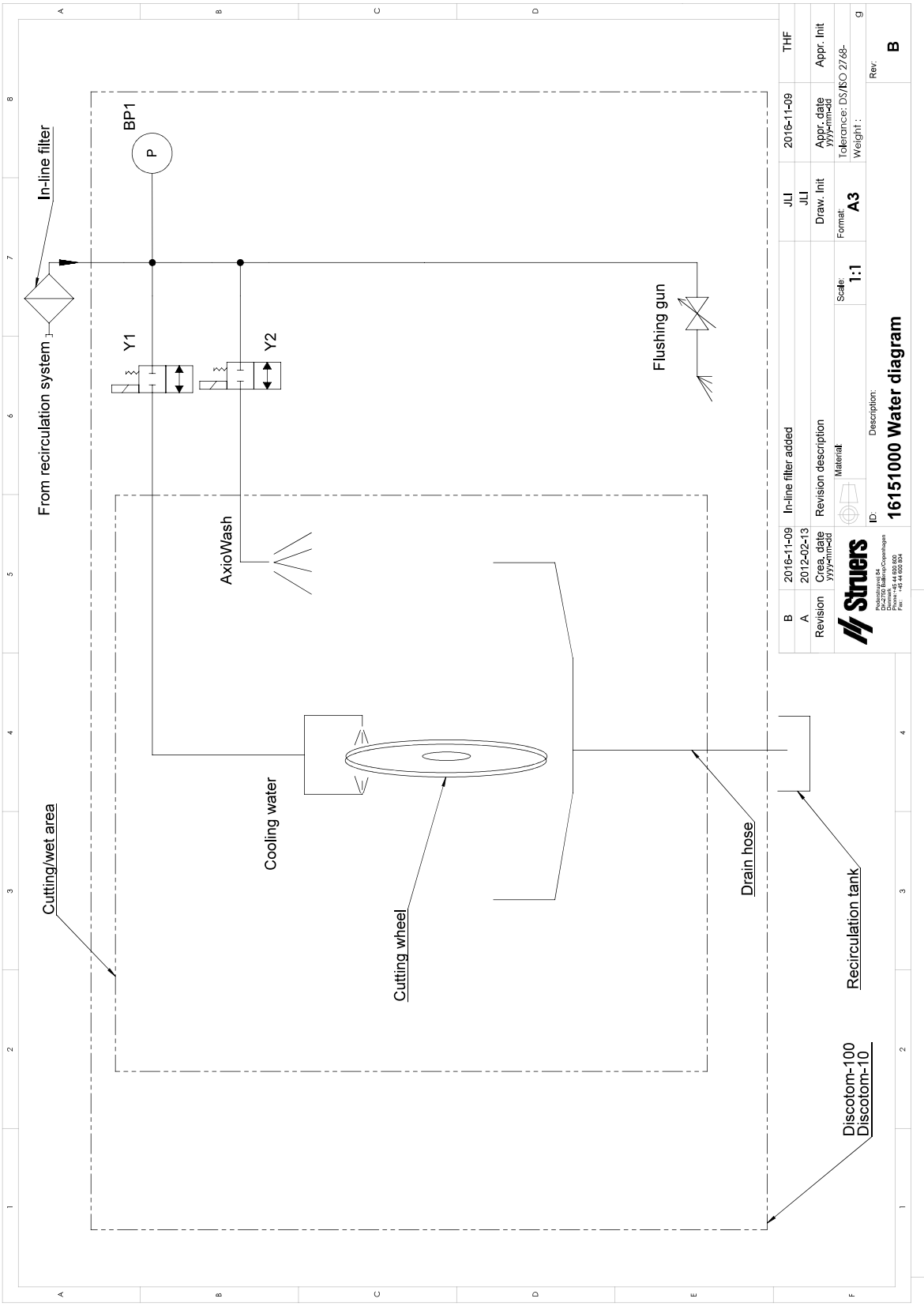
In-line filter
From recirculation system
BP1
P
Y1
Y2
Flushing gun
AxioWash
Cooling water
Cutting/wet area
Cutting wheel
Drain hose
Recirculation tank
Discotom-100
Discotom-10
B 2016-11-09 In-line filter added JLI 2016-11-09 THF
A 2012-02-13 JLI
Revision Crea. date yyyy-mm-dd Revision description Draw. Init Appr. date yyyy-mm-dd Appr. Init
Struers
Material Scale 1:1 Format: A3 Tolerance: DS/ISO 27/68- Weight : g
ID: Description: 16151000 Water diagram Rev: B

14.4 Legal and regulatory information

FCC notice

This equipment has been tested and found to comply with the limits for a Class B digital device, pursuant to part 15 of the FCC Rules. These limits are designed to provide reasonable protection against harmful interference in a residential installation. This equipment generates, uses and can radiate radio frequency energy and, if not installed and used in accordance with the instructions, may cause harmful interference to radio communications. However, there is no guarantee that interference will not occur in a particular installation. If this equipment does cause harmful interference to radio or television reception, which can be determined by turning the equipment off and on, the user is encouraged to try to correct the interference by one or more of the following measures:

- Reorient or relocate the receiving antenna.
- Increase the separation between the equipment and receiver.
- Connect the equipment into an outlet on a circuit different from that to which the receiver is connected.

15 Manufacturer

Struers ApS
Pederstrupvej 84
DK-2750 Ballerup, Denmark
Telephone: +45 44 600 800
Fax: +45 44 600 801
www.struers.com

Responsibility of the manufacturer

The following restrictions should be observed, as violation of the restrictions may cause cancellation of Struers legal obligations.

The manufacturer assumes no responsibility for errors in the text and/or illustrations in this manual. The information in this manual is subject to change without notice. The manual may mention accessories or parts not included in the supplied version of the equipment.

The manufacturer is to be considered responsible for effects on safety, reliability, and performance of the equipment only if the equipment is used, serviced, and maintained in accordance with the instructions for use.

Based on: 16157901 K

Declaration of Conformity

Manufacturer	Struers ApS • Pederstrupvej 84 • DK-2750 Ballerup • Denmark
Name	Discotom-100
Model	N/A
Function	Cut-off machine
Type	615
Cat. no.	06156129, 06156146, 06156229, 06156246 Accessories equipment: 06156901, 06156913
Serial no.	

CE Module H, according to global approach **EU**

We declare that the product mentioned is in conformity with the following legislation, directives and standards:

2006/42/EC	EN ISO 12100:2010, EN ISO 13849-2:2012, EN ISO 16089:2015, EN ISO 13850:2015, EN ISO 13849-1:2015, EN 60204-1:2018, EN 60204-1-2018/Corr.:2020
2011/65/EU	EN 63000:2018
2014/30/EU	EN 61000-6-2:2005/Corr.:2005, EN 61000-6-2:2005, EN 61000-6-4:2007, EN 61000-6-3:2007, EN 61000-6-4-A1:2011, EN 61000-3-2:2014
Additional standards	NFPA 79, FCC 47 CFR Part 15 Subpart B

Authorized to compile technical file/
Authorized signatory

Date: [Release date]

Struers
Ensuring Certainty

en	For translations see
bg	За преводи вижте
cs	Překlady viz
da	Se oversættelser på
de	Übersetzungen finden Sie unter
el	Για μεταφράσεις, ανατρέξτε στη διεύθυνση
es	Para ver las traducciones consulte
et	Tõlked leiate aadressilt
fi	Katso käännökset osoitteesta
fr	Pour les traductions, voir
hr	Za prijevode idite na
hu	A fordítások itt érhetők el
it	Per le traduzioni consultare
ja	翻訳については、
lt	Vertimai patalpinti
lv	Tulkojumus skatīt
nl	Voor vertalingen zie
no	For oversettelser se
pl	Aby znaleźć tłumaczenia, sprawdź
pt	Consulte as traduções disponíveis em
ro	Pentru traduceri, consultați
se	För översättningar besök
sk	Preklady sú dostupné na stránke
sl	Za prevode si oglejte
tr	Çeviriler için bkz
zh	翻译见

www.struers.com/Library