Struers
Ensuring Certainty

Doc. no.: 16287025-08_A_en
Date of release: 2026.06.24
Original Instructions

ACCUTOM-10

Instruction Manual

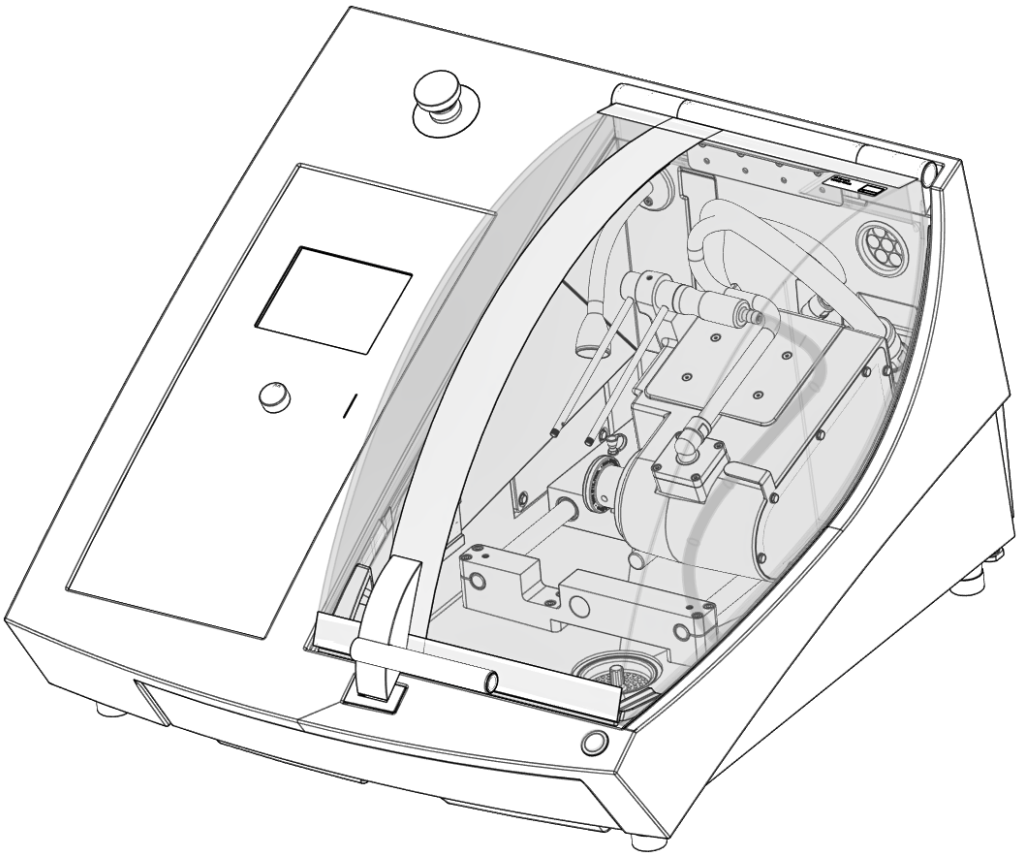

CE

Copyright

The contents of this manual are the property of Struers ApS. Reproduction of any part of this manual without the written permission of Struers ApS is not allowed.

All rights reserved. © Struers ApS.

Table of Contents

1 About this manual **6**
1.1 Accessories and consumables 6
2 Safety **6**
2.1 Intended use 6
2.2 Safety precautions 7
2.3 Safety messages 8
2.4 Safety messages in this manual 9
3 Get started **10**
3.1 Device description 10
3.2 Overview 11
3.3 Emergency stop 13
3.4 Safety lock 13
4 Transport and storage **14**
4.1 Transport 14
4.2 Long-term storage or shipping 16
5 Installation **16**
5.1 Unpack the machine 16
5.2 Check the packing list 17
5.3 Lift the machine 17
5.4 Location 18
5.5 Power supply 20
5.5.1 Single-phase supply 20
5.5.2 2-phase supply 21
5.5.3 Connection to the machine 21
5.6 Recirculation unit 21
5.6.1 Water sensitive materials 22
5.6.2 Optimize cooling 23
5.6.3 Debris collection 23
5.7 Mount a cut-off wheel 23
5.8 Mount a specimen holder 25
5.9 Exhaust system (optional) 25
5.10 Noise 26
6 Basic operation **27**
6.1 Control panel 27

6.2 The display 29
6.3 Start-up 30
6.4 Main menu 31
6.5 Change the settings 32
6.6 The position menu 33
6.7 Cutting methods 34
6.7.1 New cutting method 34
6.7.2 Settings 35
6.7.3 Material guide 37
6.7.4 Holder rotation 39
6.7.5 OptiFeed 41
6.7.6 Optimize the cutting results 41
6.8 Start the cutting process 42
6.8.1 The cutting process screen 43
6.9 Flushing hose 44
7 The Maintenance menu 45
7.1 The Service menu 46
8 The Configuration menu 47
8.1 Options menu 47
8.2 User defined cut-off wheels 50
9 Maintenance and service 51
9.1 General cleaning 52
9.2 Cut-off wheels 52
9.3 Change the coolant pump tubes 54
9.4 Daily 56
9.5 Weekly 58
9.5.1 Clean the cutting chamber 58
9.5.2 Check the coolant tank 58
9.5.3 Tube for water-free coolant 59
9.6 Monthly 59
9.6.1 Clean the coolant tank 59
9.7 Annually 61
9.7.1 The guard 61
9.7.2 Test the safety devices 62
9.8 Spare parts 63
9.9 Service and repair 64
9.10 Disposal 65
10 Troubleshooting 66
10.1 Machine problems 66

10.2 Cutting problems 66
10.3 Error messages 68
11 Technical data 69
11.1 Technical data 69
11.2 Technical data - equipment units 72
11.3 Safety Related Parts of the Control System (SRP/CS) 72
11.4 Diagrams 73
11.5 Legal and regulatory information 77
12 Manufacturer 77
Declaration of Conformity 79

1 About this manual

CAUTION
Struers equipment must only be used in connection with and as described in the Instruction Manual supplied with the equipment.

Note
Read the Instruction Manual carefully before use, and save it for future reference.

Note
If you want to view specific information in detail, see the digital version of this manual.

1.1 Accessories and consumables

Accessories

For information about the available range, see the Accutom-10 brochure on our website at www.struers.com.

Consumables

The machine is designed to be used only with Struers consumables specifically designed for this purpose and this type of machine.

Other products may contain aggressive solvents, which dissolve e.g. rubber seals. The warranty may not cover damaged machine parts (e.g. seals and tubes), where the damage can be directly related to the use of consumables not supplied by Struers.

For information about the available range, visit our website at www.struers.com.

2 Safety

2.1 Intended use

The machine is for professional, automatic materialographic cutting of materials for further materialographic inspection.

The machine must be operated only by skilled/trained personnel.

The machine is designed to be used only with Struers consumables specifically designed for this purpose and this type of machine.

The machine is for use in a professional working environment (e.g. a materialographic laboratory).

Do not use the machine for the following	Cutting of materials other than solid materials suitable for materialographic studies. The machine must not be used for any type of explosive and/or flammable material, or materials which are not stable during machining, heating or pressure. The machine must not be used with cut-off wheels which are not compatible with the machine requirements (e.g. toothed cut-off wheels).
Model	Accutom-10

2.2 Safety precautions

Read carefully before use

1. Ignoring this information and mishandling of the equipment can lead to severe bodily injuries and material damage.
2. The machine must be installed in compliance with local safety regulations. All functions on the machine and any connected equipment must be in working order.
3. The operator must read the safety precautions and Instruction Manual, as well as relevant sections of the manuals for any connected equipment and accessories. The operator must read the Instruction Manual and, where applicable, the Safety Data Sheets for the applied consumables.
4. This machine must be operated and maintained only by skilled/trained personnel.
5. The machine must be placed on a safe and stable table with an adequate working height. The table must be able to carry at least the weight of the machine and the accessories.
6. Make sure that the actual electrical power supply voltage corresponds to the voltage stated on the name plate of the machine. The machine must be earthed (grounded). Always follow local regulations.
7. Always switch off the electrical power supply and remove the plug or power cable before dismantling the machine or installing additional components.
8. Consumables: only use consumables specifically developed for use with this type of materialographic machine.
9. Follow all safety requirements for handling, mixing, emptying and disposing of the cooling fluid additive. Avoid skin contact.
10. Pay attention to the protruding safety catch when the guard is raised.
11. Always use intact cut-off wheels that have been approved for a minimum of: 3000 rpm.
12. Make sure that the workpiece is safely fixed in a clamping device.
13. Wear suitable gloves to protect fingers from abrasives and hot/sharp specimens.
14. If you observe malfunctions or hear unusual noises, switch off the machine and call technical service.

15. Wear safety goggles when using the flushing hose. Only use the flushing hose for cleaning inside the cutting chamber.
16. If you observe malfunctions or hear unusual noises, switch off the machine and call technical service.
17. Do not switch the machine on and off more than once every five minutes. Damage to the electrical components could occur.
18. The machine must be disconnected from the electrical power supply before any service. Wait 15 minutes until residual potential on the capacitors is discharged.
19. In case of fire, alert bystanders, the fire brigade and cut power. Use a powder fire extinguisher. Do not use water.
20. The machine is designed to be used only with Struers consumables specifically designed for this purpose and this type of machine.
21. Struers equipment must only be used in connection with and as described in the Instruction Manual supplied with the equipment.
22. If the equipment is subjected to misuse, incorrect installation, alteration, neglect, accident or incorrect repair, Struers will accept no responsibility for damage to the user or the equipment.
23. Dismantling of any part of the equipment, during service or repair, must always be performed by a qualified technician (electromechanical, electronic, mechanical, pneumatic, etc.).

2.3 Safety messages

Struers uses the following signs to indicate potential hazards.

ELECTRICAL HAZARD
This sign indicates an electrical hazard which, if not avoided, will result in death, or serious injury.

WARNING
This sign indicates a hazard with a medium level of risk which, if not avoided, could result in death, or serious injury.

CRUSHING HAZARD
This sign indicates a crushing hazard which, if not avoided, could result in minor, moderate, or serious injury.

CAUTION
This sign indicates a hazard with a low level of risk which, if not avoided, could result in minor, or moderate injury.

Emergency stop
This sign indicates that information regarding the emergency stop is available.

General messages

Note
This sign indicates that there is a risk of damage to property, or a need to proceed with special care.

Hint
This sign indicates that additional information and hints are available.

2.4 Safety messages in this manual

ELECTRICAL HAZARD
Switch off the electrical power supply before installing electrical equipment.
The machine must be earthed (grounded).
Make sure that the actual electrical power supply voltage corresponds to the voltage stated on the name plate of the machine.
Incorrect voltage can damage the electrical circuit.

WARNING
Replace the guard immediately if it has been weakened by collision with projectile objects or if there are visible signs of deterioration or damage.

WARNING
Do not use the machine with defective safety devices.
Contact Struers Service.

WARNING
Safety critical components must be replaced after a maximum lifetime of 20 years.
Contact Struers Service.

WARNING
To ensure its intended safety, the guard must be replaced every 3 years. A label on the guard indicates when it is due to be replaced.

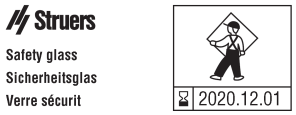

WARNING
In case of fire, alert bystanders, the fire brigade and cut power. Use a powder fire extinguisher. Do not use water.

CRUSHING HAZARD
Take care of your fingers when handling the machine.
Wear safety shoes when handling heavy machinery.

CAUTION
Struers equipment must only be used in connection with and as described in the Instruction Manual supplied with the equipment.

CAUTION
Mind the protruding safety catch when the safety guard is raised.

CAUTION
Read the Safety Data Sheet for the additive for coolant before use.

CAUTION
Avoid skin contact with the coolant additive.
Always wear protective gloves and safety goggles.

CAUTION
Prolonged exposure to loud noises may cause permanent damage to a person's hearing.
Use hearing protection if the exposure to noise exceeds the levels set by local regulations.

CAUTION
When working at machines with rotating parts, take care to prevent clothes and/or hair from being caught by the rotating parts.

CAUTION
Do not start flushing until the flushing gun points into the cutting chamber.

CAUTION
Wear suitable gloves to protect fingers from abrasives and hot/sharp specimens.

CAUTION
Wear suitable gloves to protect fingers from abrasives and warm/sharp specimens. Coolant can contain swarf (cutting debris or other particles.

3 Get started

3.1 Device description

Accutom-10 is an automatic cut-off machine for cutting of the majority of solid and stable (non-explosive) materials. It has Y-movement of the cut-off wheel, a motorized X-arm and a built-in

recirculation cooling unit. The cut-off wheel and X-arm can only be moved either when the guard is closed or holding the hold-to-run button when using the positioning keys.

The operator selects and mounts the cut-off wheel and enters the process parameters.

The operator mounts the workpiece in the clamping tool. Then, the clamping tool is mounted directly to the cutting arm via a dovetail connection.

The guard locks when the operator starts the machine. It remains locked until all movements are stopped, and the cut-off wheel is in the selected stop position.

The specimens can become hot during the process. It is recommended to wear gloves when handling the processed specimens.

It is recommended to connect Accutom-10 to an external exhaust system to remove fumes from the process.

In case of power-loss during the process, the guard remains locked.

Use the special key to release the lock and open the guard.

The emergency stop cuts the power to all moving parts. The guard can be opened, when the emergency stop is released.

3.2 Overview

Front view

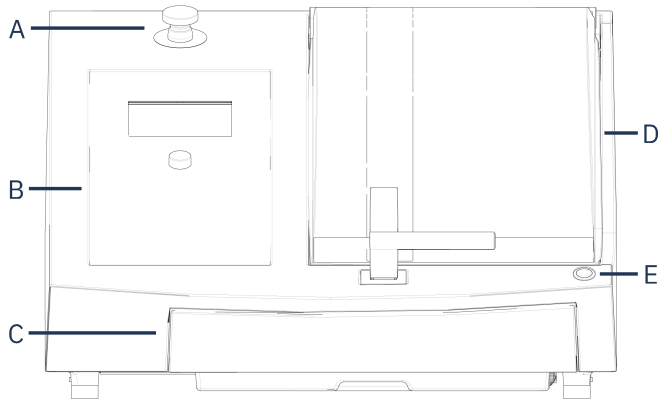

A	Emergency stop	**D**	Guard
B	Front panel	**E**	Hold-to-run button
C	Coolant tank		

Emergency stop
The emergency stop button is located on the front of the machine.

- Push the red button to activate.
- Turn the red button clockwise to release.

Rear view

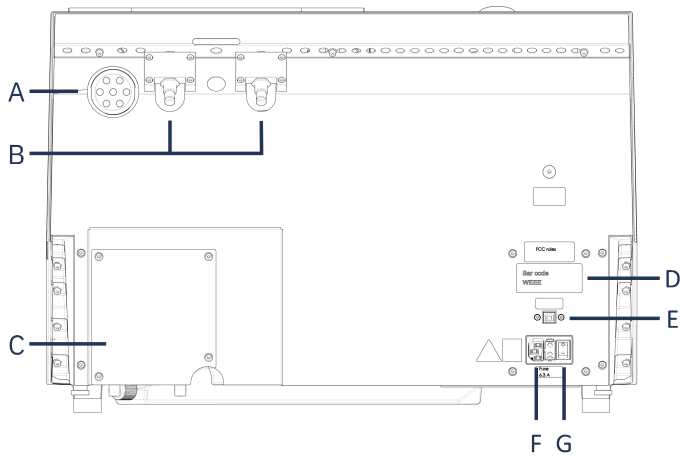

A	Exhaust flange	**D**	Name plate
B	Hinges	**E**	Service socket
C	Pump cover	**F**	Power socket
		G	Main switch

Cutting chamber

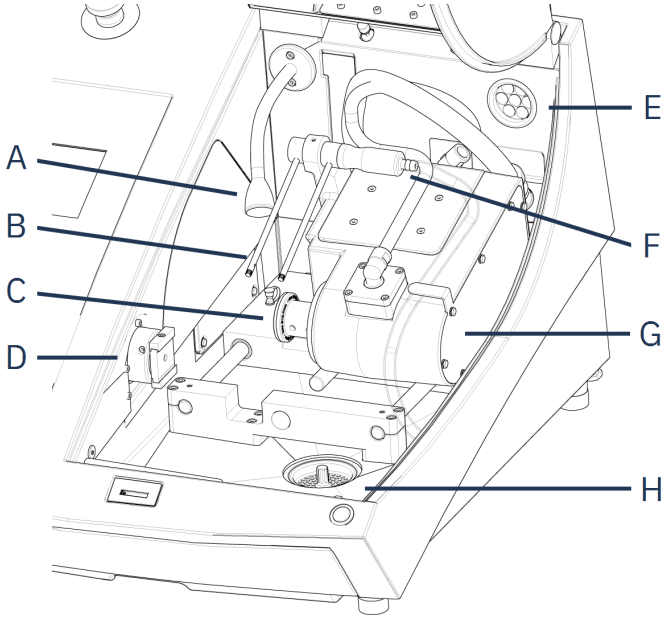

A	Flexible LED light	**E**	Exhaust
B	Coolant nozzles	**F**	Flushing hose
C	Wheel spindle	**G**	Cutting motor
D	Specimen holder arm	**H**	Tray for cut off specimens

3.3 Emergency stop

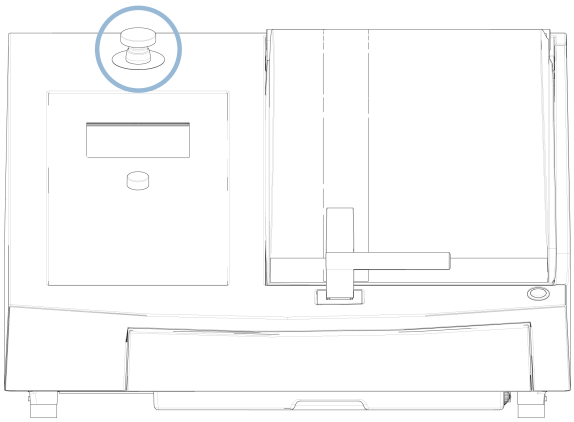

Emergency stop
Do not use the emergency stop for operational stop of the machine during normal operation.
Before you release the emergency stop, investigate the reason for activating the emergency stop and take any necessary corrective action.

- To activate the emergency stop, press the red emergency stop button.
- To release the emergency stop, turn the red emergency stop button clockwise.

3.4 Safety lock

You can only open the guard on the machine when the machine is connected to the power supply and the main power switch is on.

To open the guard if the power is not connected

Use the triangle key supplied to deactivate the safety lock.

1. Remove the coolant tank.

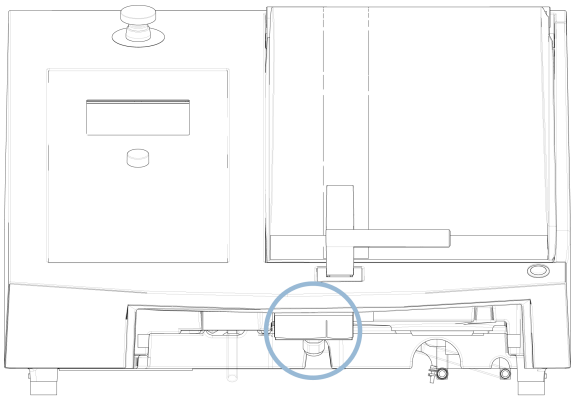

2. Insert the key.
3. Turn the key 180°. Do not use force.

4. Re-activate the safety lock release before you start operating the machine.

4 Transport and storage

If, at any time after the installation, you have to move the unit or place it in storage, there is a number of guidelines we recommend that you follow.

- Package the unit securely before transportation. Insufficient packaging could cause damage to the unit and will void the warranty. Contact Struers Service.
- We recommend that you use the original packaging and fittings.

4.1 Transport

CRUSHING HAZARD
Take care of your fingers when handling the machine.
Wear safety shoes when handling heavy machinery.

Note
We recommend that you keep all original packaging and fittings for future use.

Prepare for transport

1. Empty the coolant tank.
2. Disconnect the machine from the electrical power supply.
3. Disconnect the machine from the exhaust system.
4. Remove any accessories.
5. Clean and dry the machine.

Move the machine

Note
Always lift the machine from beneath.
Do not lift the machine by holding it by the gray cabinet.

- Use a crane and two lifting straps to lift the machine. The lifting straps must be approved for lifting at least twice the weight of the load.
- Use straps of approx. 3 - 3.5 m (10 - 11.5 ft) in length so that they do not place stress on the guard.
- A lifting bar is recommended so that the two straps are kept apart below the lifting point.
- Use screwdrivers/bits: TX30, PH2 and H4

Procedure

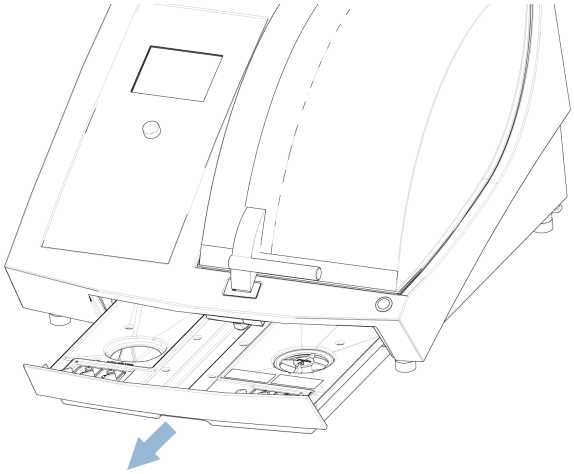

1. Remove the coolant tank.

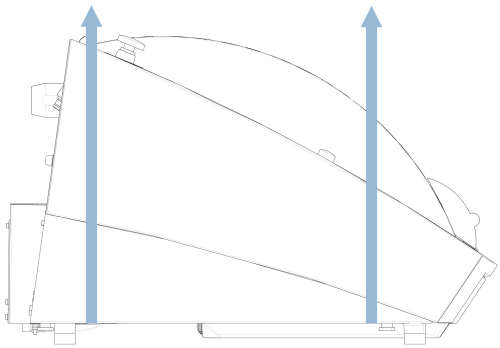

2. Position the straps under the machine, so that they are on the inside of the feet.
3. Make sure that the tension on the lifting straps is distributed evenly.
4. Lift the front of the machine and carefully move it onto the table.
5. The machine must rest securely with all 4 feet on the table.
6. Put the coolant tank back in place.

At the new location

- At the new location, make sure that the facilities required are in place.
- Lift the machine onto a stable surface.
- Put the coolant tank back in place.
- Install the machine.

4.2 Long-term storage or shipping

Note
We recommend that you keep all original packaging and fittings for future use.
Clean the machine and all accessories thoroughly.

If the machine is bound for long-time storage or shipping, follow these steps:

1. Clean and dry the machine.
2. Place the machine on the blocks on the original pallet.
3. Use the original transport brackets to secure the machine.
4. Wrap the machine in plastic wrap.
5. Build a crate around the machine.
6. Wrap and place accessories and other loose items in the crate.
7. Place a bag of desiccant (silica gel) in the box.

At the new location

- At the new location, make sure that the facilities required are in place.

5 Installation

5.1 Unpack the machine

CRUSHING HAZARD
Take care of your fingers when handling the machine.
Wear safety shoes when handling heavy machinery.

Note
We recommend that you keep all original packaging and fittings for future use.

Procedure

1. Remove the screws around the base of the packing crate and lift off the upper part of the crate.
2. Use a 4 mm Allen key to remove the screws in the metal brackets that secure the machine to the pallet.
3. Remove the coolant tank.
4. Remove any loose parts and accessories.
5. Lift the machine. See Lift the machine ► 17.

5.2 Check the packing list

Optional accessories may be included in the packing box.

The packing box contains the following items:

Pcs.	Description
1	Accutom-10
2	Electrical power supply cables
1	Triangle key for safety lock release
1	Support pin
1	Socket spanner. 17 mm (0.7")
1	Tray (with paper)
1	Allen key, 3 mm (0.12")
1	Brush (for cleaning)
1	Hose for connection to exhaust. Diameter: 51 mm (2"). Length: 1.5 m (59")
1	Hose clamp. Diameter: 40 - 60 mm (1.6" - 2.4")
1	Flange screw for the cup wheel
1	Instruction Manual set

5.3 Lift the machine

CRUSHING HAZARD
Take care of your fingers when handling the machine.
Wear safety shoes when handling heavy machinery.

Note
We recommend that you keep all original packaging and fittings for future use.

Note
Do not lift the machine by the light gray top part.
Always lift the machine from beneath.

Weight

See Technical data ► 69.

Requirements

- Use a crane and two lifting straps to lift the machine. The lifting straps must be approved for lifting at least twice the weight of the load.
- Use straps of approx. 3 - 3.5 m (10 - 11.5 ft) in length so that they do not place stress on the guard.

- A lifting bar is recommended so that the two straps are kept apart below the lifting point.
- Use screwdrivers/bits: TX30, PH2 and H4

Procedure

1. Remove the coolant tank.

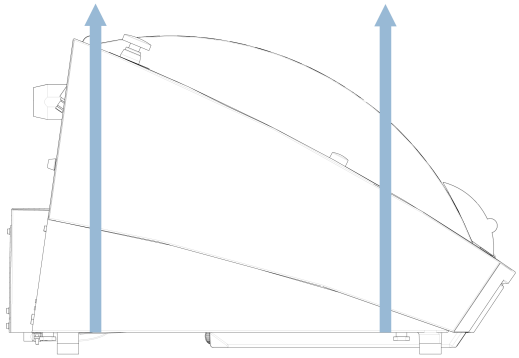

2. Position the straps under the machine, so that they are on the inside of the feet.
3. Make sure that the tension on the lifting straps is distributed evenly.
4. Lift the front of the machine and carefully move it onto the table.
5. The machine must rest securely with all 4 feet on the table.

5.4 Location

CRUSHING HAZARD
Take care of your fingers when handling the machine.
Wear safety shoes when handling heavy machinery.

- The machine must be placed on a safe and stable table with an adequate working height. The table must be able to carry at least the weight of the machine and the accessories.

Recommended workbench dimensions	
X:	92 cm (36.2")
Y:	90 cm (35.4")
Z:	80 cm (31.5")

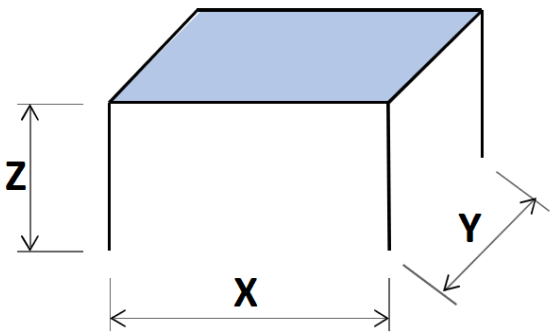

- The machine must be placed close to the electrical power supply.
- The machine must be placed in a well-ventilated room or connected to an exhaust system.
- The machine must rest securely with all 4 feet on the table.
- The machine must be completely level: tolerance ± 1 mm.
- Make sure that there is sufficient space around the machine for service access.
- Make sure that there is enough room in front of the machine: 100 cm (40").
- Make sure that there is enough room behind the machine to fully open the cover.
- Make sure that there is enough room behind the machine for the exhaust hose: approx. 15 cm (5.9").

Illumination

- Make sure that the work station has adequate lighting. Avoid direct glare (dazzling light sources within the operator's line of vision) and reflected glare (reflections of light sources).

  A minimum of 300 Lumen is recommended to illuminate the controls and other work areas.

Ambient conditions		
Operating environment	Surrounding temperature	Operation: 5 - 40°C (40 - 105°F)
		Storage: 0 - 60°C (32 - 140°F)
	Humidity	Operation: 35 - 85% RH non-condensing
		Storage: 0 - 90% RH non-condensing

5.5 Power supply

ELECTRICAL HAZARD
Switch off the electrical power supply before installing electrical equipment.
The machine must be earthed (grounded).
Make sure that the actual electrical power supply voltage corresponds to the voltage stated on the name plate of the machine.
Incorrect voltage can damage the electrical circuit.

ELECTRICAL HAZARD
Disconnecting the unit from the electrical power supply must only be done by a qualified technician.

Note
The equipment is shipped with 2 types of electrical power cables. If the plug supplied on these cables is not approved in your country, the plug must be replaced with an approved plug.

Power supply	
Voltage/frequency	200 - 240 V (50 - 60 Hz)
Power inlet	1-phase (N+L1+PE) or 2-phase (L1+L2+PE) The electrical installation must comply with Installation Category II
Power, nominal load	1080 W
Power, idle	45 W
Current, nominal load	4.5 A
Current, max.	9.1 A
Current, largest load	1.45 A

5.5.1 Single-phase supply

The 2-pin plug (European Schuko) is for use on single-phase electrical power connections.

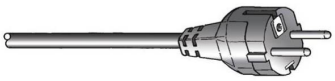

The leads must be connected as follows:

Yellow/Green	Earth (ground)
Brown	Line (live)
Blue	Neutral

5.5.2 2-phase supply

The 3-pin plug (North American NEMA) is for use on 2-phase electrical power connections.

The leads must be connected as follows:

Green	Earth (ground)
Black	Line (live)
White	Line (live)

5.5.3 Connection to the machine

1. Connect the electrical power cable to the machine (IEC 60320 connector).
2. Connect the other end of the cable to the electrical power supply socket.

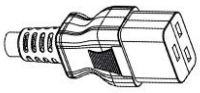

5.6 Recirculation unit

The machine has a built-in recirculation coolant system. The coolant coming from the nozzles passes over the cut-off wheel and is collected in the drain in the cutting chamber. The coolant then returns to the tank located under the cutting chamber.

CAUTION
Read the Safety Data Sheet for the coolant additive before use.

CAUTION
Avoid skin contact with the coolant additive.
Always wear protective gloves and safety goggles.

Fill the recirculation tank with coolant

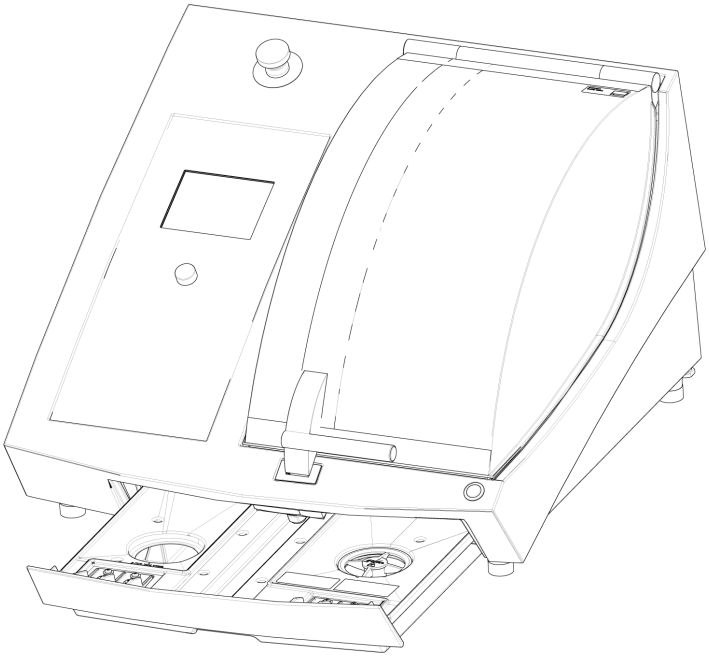

1. Make sure that the coolant tank is in position under the chamber.
2. Fill the tank with water and coolant additive through the hole in the base of the chamber.

Note
Make sure that you do not to overfill the tank.

Note
Make sure to use the coolant additive at the right concentration. Follow the instructions for the coolant additive.
Use a refractometer to check the concentration of coolant additive.

5.6.1 Water sensitive materials

Note
The standard tube only lasts for a few hours, if it is used for water-free coolant.

If you use water-free coolant, replace the standard tube in the coolant pump with a tube for water-free coolant.

To replace the tube in the coolant pump, see Change the coolant pump tubes ► 54.

5.6.2 Optimize cooling

Note
Consumables: only use consumables specifically developed for use with this type of materialographic machine.
- Do not use oil, petrol, or turpentine-based additives, as they can affect the coolant tubes.

Sufficient cooling is essential for ensuring the best cutting quality, and to avoid burning of the workpiece and damage to the cut-off wheel.

- Always use additive to protect the cutting machine from corrosion and to improve cutting and cooling qualities.
- Make sure that there is sufficient fluid in the coolant tank for optimal cooling.
- Make sure that the concentration of additive in the coolant is as stated on the additive container.
- Add coolant additive whenever you refill the coolant tank with water. See Recirculation unit ► 21.
- We recommend that you change the coolant at least once a month to prevent the growth of microorganisms.

5.6.3 Debris collection

The machine has three systems to keep debris from contaminating the coolant and blocking the nozzles:

- A tray with paper to filter the cutting debris and to collect the cut specimens.
- A basket in the drain prevents larger pieces of debris from entering the tank.
- A magnet in the tank collects magnetic particles.

Note
Check the basket and the magnet for cutting debris before you start the cutting process. A blocked drain can result in water overflow and insufficient cooling if the level of coolant in the tank is too low.

5.7 Mount a cut-off wheel

Procedure

CAUTION
Mind the protruding safety catch when the safety guard is raised.

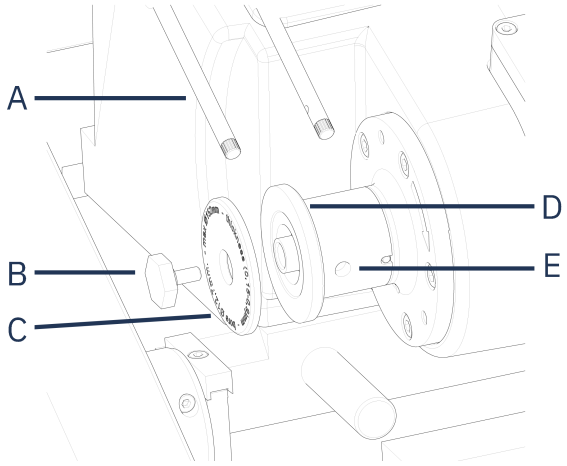

A	Coolant nozzles	**D**	Inner flange
B	Flange screw	**E**	Hole for support pin
C	Outer flange		

1. Lift the guard to its open position (the position where it stays up and open when you release it).
2. Lift the coolant nozzles to gain access to the cut-off wheel assembly.
3. Insert the support pin into the hole in the cut-off wheel spindle.

Hint
The spindle has a left-hand thread.

4. Use the 17 mm socket spanner to loosen the flange screw.
5. Remove the outer flange.

Note
The tolerance between the spindle and inner flange is very small which means that the two surfaces must be absolutely clean.
Never try to force the cut-off wheel on as this can damage the spindle or the cut-off wheel. If there are any small burrs, remove them with grinding paper, grit size 1200.

6. Before you mount the cut-off wheel, test the cut-off wheel for damages. See Cut-off wheels ► 52.
7. Mount the cut-off wheel and hold it flat against the inner flange.
8. Remount the outer flange with the machined surface facing towards the inner flange.

9. Mount the flange screw.
10. Insert the support pin into the hole in the wheel spindle.
11. Use the 17 mm socket spanner to gently fasten the flange screw. Tighten the screw with a force of maximum 5 N·m (4 lbf·ft).

Note
Check that the cut-off wheel is held securely between the inner flange and outer flange.
If the cut-off wheel can be tilted sideways, then it is incorrectly mounted; this will result in uneven wear or breakage.

12. Lower the coolant nozzles to their operating positions.

5.8 Mount a specimen holder

1. Clamp the workpiece in a dovetail specimen holder.
2. Fasten the specimen holder in the specimen holder arm by sliding the specimen holder into the dovetail fixture.
3. Tighten the screw.

5.9 Exhaust system (optional)

We recommend that you connect the machine to an exhaust system because workpieces can emit harmful gases when they are being cut.

The machine is prepared for connection to an exhaust system through a 50 mm ventilation flange at the rear of the cabinet.

Minimum capacity: 30 m^3/h (1,060 ft^3/h) at 0 mm (0") water gauge.

Exhaust connection

The machine is delivered with an exhaust hose.

- Length: 1.5 m (4.9').
- Diameter: 50 mm (2").

Procedure

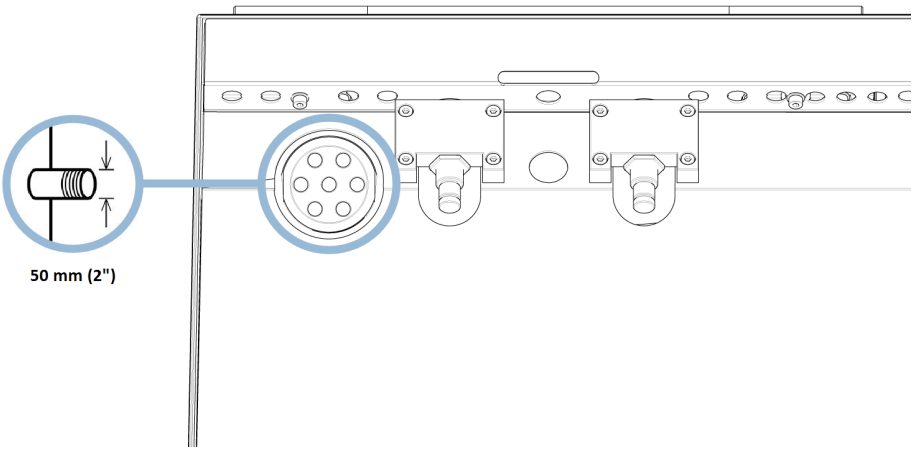

- Mount the exhaust hose from the ventilation flange on the machine to the exhaust system.

5.10 Noise

For information on the sound pressure level value, see this section: Technical data ► 69.

CAUTION
Prolonged exposure to loud noises may cause permanent damage to a person's hearing.
Use hearing protection if the exposure to noise exceeds the levels set by local regulations.

Handling noise during operation

Different materials have different noise characteristics.

- To lower the noise, decrease the rotational speed and/or the force with which the workpiece is pressed against the cut-off wheel.

  The processing time may increase.

6 Basic operation

6.1 Control panel

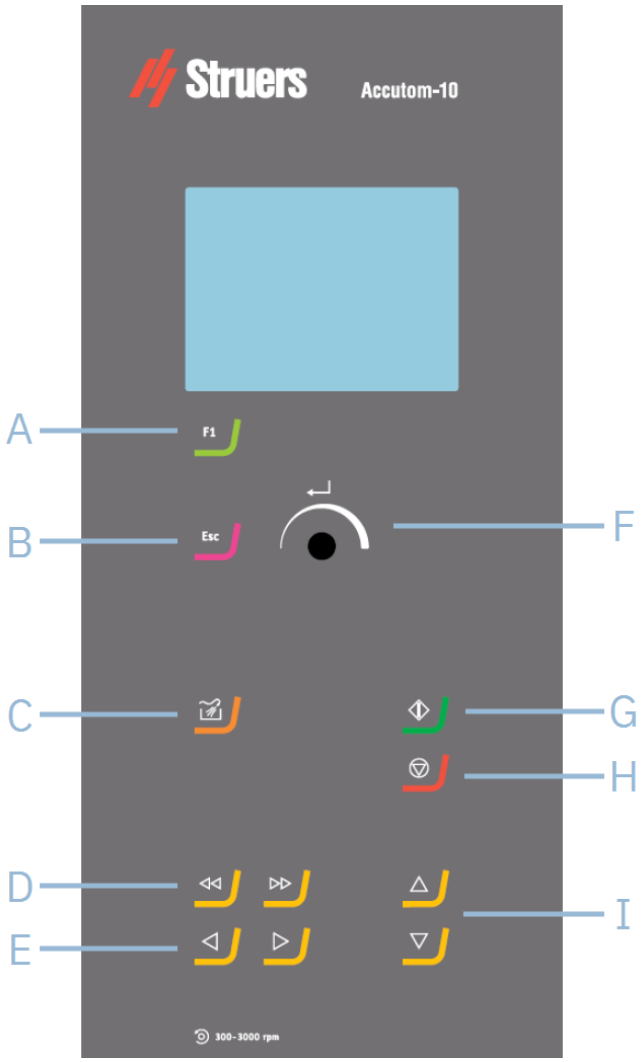

A	F1	**F**	Turn/push knob
B	Esc	**G**	Start
C	Flush	**H**	Stop
D	Fast positioning keys	**I**	Backward and forward positioning keys
E	Left and right positioning keys		

Button	Function
	F1 Menu dependent multifunction key. See the bottom line of the individual screens.
	Esc Leaves the current menu.
	Flush Starts the flushing operation.
	Start Starts the cutting process.
	Stop Stops the cutting process.
	Fast positioning keys These keys open the **Positioning** menu or move the specimen holder in the X-direction in steps of 100 µm. Keep the key pressed to increase the speed.
	Left and right positioning keys These keys open the **Positioning** menu or move the specimen holder slowly in the X-direction in steps of 5 µm. Keep the key pressed to increase the speed.

Button	Function
	Backward and forward positioning keys These keys open the **Positioning** menu or move the wheel spindle in the Y-direction in steps of 100 µm. Keep the key pressed to increase the speed.
	Turn/push knob Use this knob on the control panel to select menu items. • Turn the knob to select a menu, a method group or to change a value. • Press the knob to enter a field or activate the selection. • Turn the knob to increase or decrease the numeric value, or to toggle between two options. – If there are only two options, press the knob to toggle between the two options. – If there are more than two options, a pop-up box is shown.

6.2 The display

Note
The screens shown in this manual may differ from the actual screens in the software.

When you switch on the machine, the display shows the configuration and the version of the installed software.

The display is divided into three main areas:

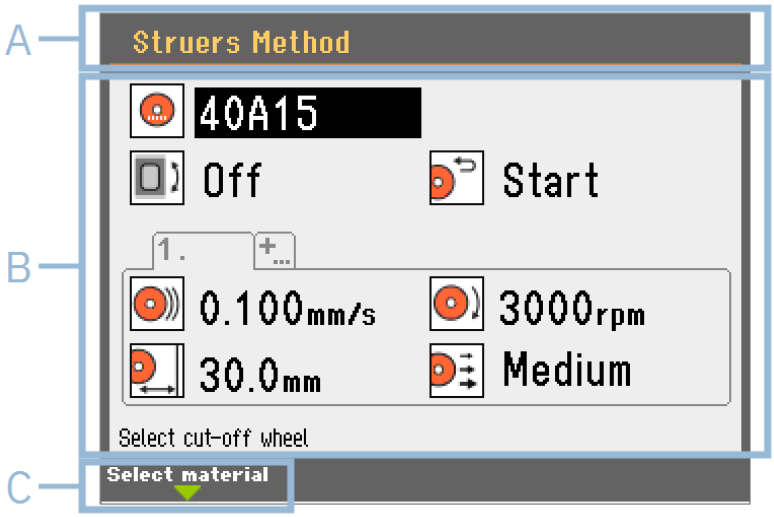

A	**Title bar**	The title bar shows the function you have selected.
B	**Information fields**	These fields show information about the selected function. In some fields you can select and change the value.
C	**F1 function**	Menu-dependent function.

Acoustic signals	
Short beep	A short beep when you press a key, indicates that the selection is confirmed. You can enable or disable the beep: select **Configuration**.
Long beep	A long beep when you press a button, indicates that the key cannot be activated at the moment. You cannot disable this acoustic signal.

Standby mode

To increase the lifetime of the display, the backlight is dimmed automatically if the machine has not been used for a while. (10 min)

- Press any key to reactivate the display.

6.3 Start-up

Start-up - the first time

The first time you switch on the machine, you will be prompted to select the language you want to use, and set the date and time.

If needed, use the controls on the control panel to change the settings. See Change the settings ► 32.

Select language

- Select the language you want to use. If needed, you can change the language from the **Options** menu. See Options menu ► 47.

Start-up - daily operation

When you switch on the machine, the screen that was shown when the machine was switched off is shown just after the start-up screen.

Reference positions

The reference positions are calibrated at each start-up, or if the reference positions have been lost.

6.4 Main menu

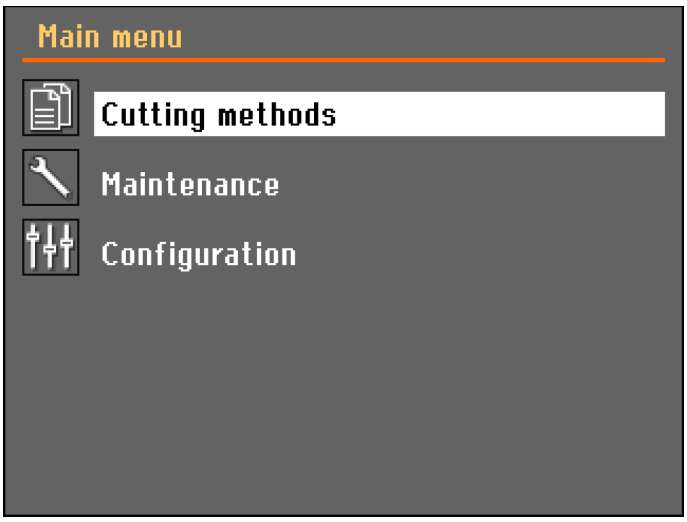

From the **Main menu** you can choose between the following options:

Cutting methods

Maintenance

Configuration

6.5 Change the settings

Alphanumeric values

To change a setting, select the field for changing the setting.

1. Turn the knob to go to the field where you wish to change the setting.
2. Press the knob to enter the field.
   - **More than two options:**
     Scrolling list: Turn the knob to scroll up or down in a list of values.

     Pop-up dialog: Turn the knob to scroll up or down the list of options. Press the knob to select the desired option.
   - **Two options:**
     Press the knob to toggle between the options.
3. If needed, press Esc to cancel functions/changes and go back to the previous screen.

Numeric values

1. Turn knob to select the value to be changed.
2. Push knob to edit the value. A scroll box appears around the value.
3. Turn knob to increase or decrease the numeric value.
4. Push knob to accept the new value. (Pressing Esc aborts the changes, preserving the original value.)

6.6 The position menu

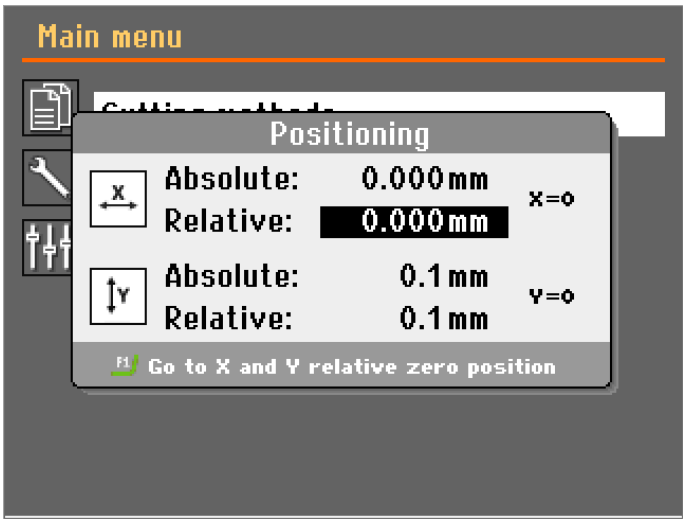

The **Positioning** menu is displayed when you press the positioning keys.

- Press the hold-to run button and the positioning keys to move the specimen holder arm or the cut-off wheel while the guard is open.

The positioning screen disappears after 5 seconds or when you press Esc.

Set the relative zero position

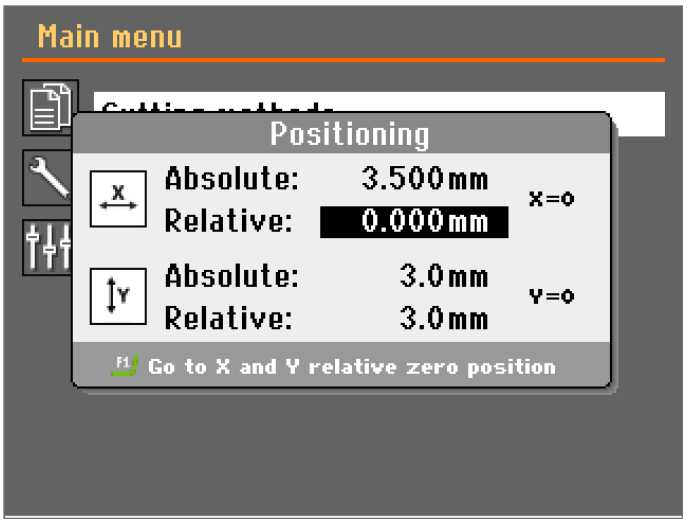

When cutting identical workpieces or specimens, you can set a relative zero position:

- Move the workpiece or specimen to the desired X-position, then press Enter. This will now be the X relative zero position.
- Move the cut-off wheel to the desired Y position, then press Enter. This will now be the Y relative zero position.

Move to the relative zero

To move the workpiece to X relative zero position:

1. Close the guard.

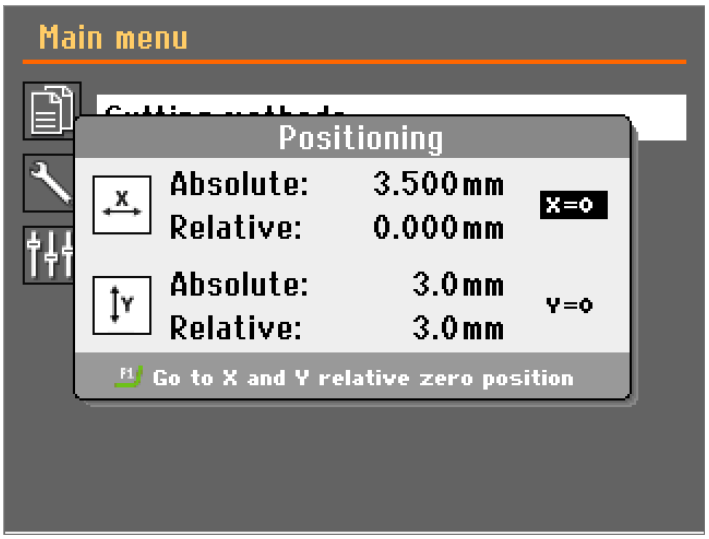

2. Select **X = 0** and press Enter.

To move the cut-off wheel to Y relative zero position:

1. Close the guard.
2. Select **Y = 0** and press Enter.

To simultaneously move the workpiece and cut-off wheel to the X and the Y relative zero position:

1. Close the guard.
2. Press F1.

6.7 Cutting methods

6.7.1 New cutting method

You can create a new cutting method or copy an existing method.

1. From the **Main menu** screen, select **Cutting methods**.
2. Press F1. A pop-up menu appears.
3. Select **New** to create a new cutting method or select **Copy** to make a copy of the highlighted cutting method.

Lock cutting methods

You can lock methods to prevent making changes.

Locked	**Unlocked**

Hint
If you make changes, the original method will be overwritten. To keep the original method, make a copy of the method and rename it.

6.7.2 Settings

1. From the **Main menu** screen, select **Cutting methods**.

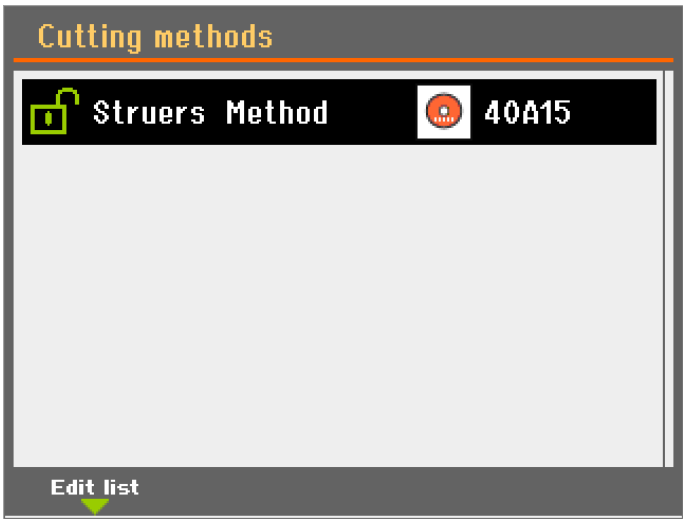

2. Select a cutting method.

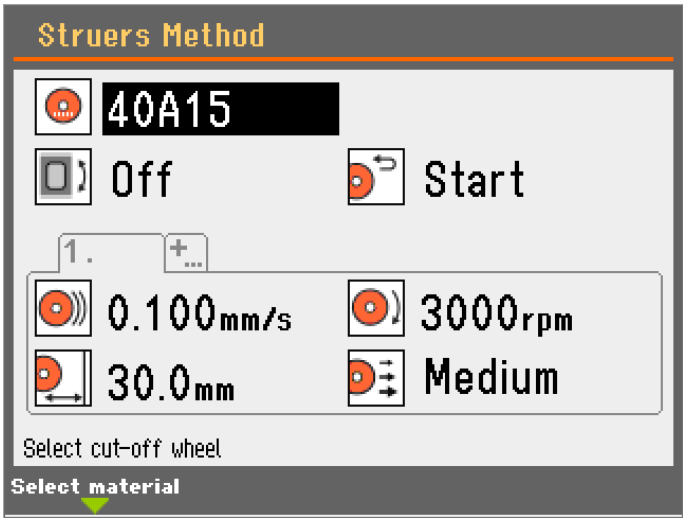

Parameters		Settings	Change increment / description	Default
	Cut-off wheel	**Struers cut-off wheels**		
		User defined cut-off wheels		
	Holder rotation	**Off**		**Off**
		Rotate	Speed: 1, 2 or 3	1
		Oscillate	Angle: 10 - 400°	30°
			Speed: 1, 2 or 3	1
	Return position	**Start**	The cut-off wheel returns to the start position.	
		Zero	The cut-off wheel returns to the zero position.	
		Stay	The cut-off wheel does not move after cutting.	

Note
When using the **Start** or **Zero** return position, make sure that the Y-stop position is set correctly. If the workpiece is not cut through before the workpiece is retracted, the cut-off wheel can be damaged.

Note
Use the **Stay** function for bakelite-bonded diamond or CBN cut-off wheels, as retraction can destroy the rim of the cut-off wheel.

	Feed speed	0.005 - 3 mm/s (0.0002 - 0.12 in/s)	0.005 mm/s (0.0002 in/s)	0.005 mm/s (0.0002 in/s)
	Rotational speed	300 - 3000 rpm	50 rpm	Recommended setting for the cut-off wheel
	Cutting length	1 - 110 mm (0.04 - 4.3")	0.1 mm (0.004")	30 mm (1.2")

Parameters		Settings	Change increment / description	Default
	Cutting force	**Low**		
		Medium		
		High		

Change the settings

1. Select the cutting method you want to edit.
2. Select and edit the parameters.

   The changes are saved automatically. You can reset the method to the default values. See The Maintenance menu ► 45.

6.7.3 Material guide

To access the **Material guide**:

1. Select a cutting method.
2. Highlight the cut-off wheel parameter.

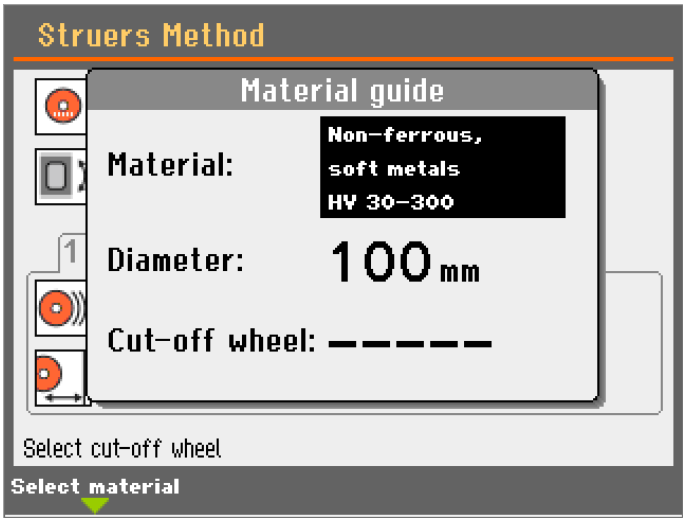

3. Press F1. A pop-up menu will appear.

4. Select a material from the list.
5. Select the diameter.

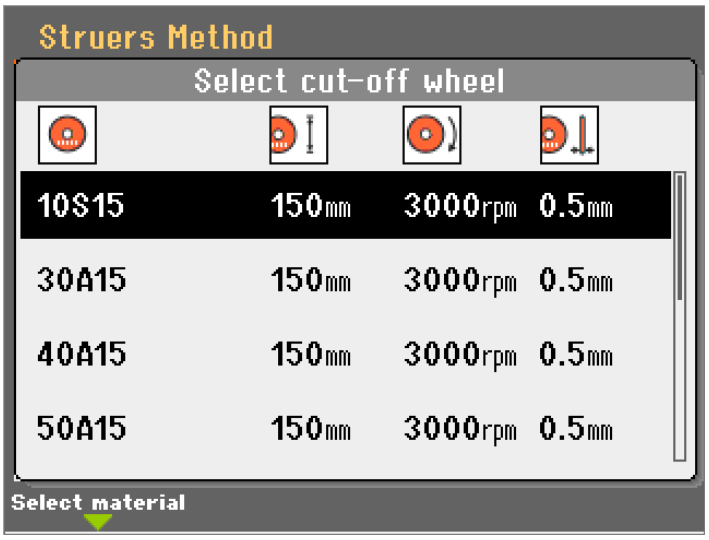

6. Select a cut-off wheel from the list. The recommend rotational speed will be applied automatically.

Depending on the specific requirements, you can adjust the cutting parameters to achieve the required objectives.

Use the following table as a guide when selecting the cut-off wheel and cutting parameters according to the material to be cut.

Material	Cut-off wheel	Hardness (HV)	Cutting force	Feed speed (mm/s)	Rotational speed
High precision, low material loss, very small specimens	M1D10 M1D08	> 800	Low	0.005 - 0.15	3000
Ceramics, minerals and crystals	M0D15 M1D15	> 800	Low	0.005 - 0.15	3000
			Low	0.005 - 0.20	3000
			High	0.005 - 0.30	3000
			High	0.005 - 0.30	2700
Sintered carbides and hard ceramics	B0D15	> 800	Medium	0.005 - 0.25	3000
			Medium	0.005 - 0.25	2700
Extremely hard ferrous metals	B0C15	> 500	Medium	0.005 - 0.25	3000
Hard and very hard ferrous metals	50A15	500 - 800	Medium	0.05 - 0.30	1000 - 3000
Medium hard ferrous metals	40A15	200 - 500	Medium	0.05 - 0.30	1000 - 3000
Soft to medium soft ferrous metals	30A15	300	Medium	0.05 - 0.30	1000 - 3000
Soft and ductile non-ferrous metals	10S15	30 - 400	Medium	0.05 - 0.30	1000 - 3000
Plastic and resins, mounted material	E0D15	< 100	Medium	0.05 - 0.30	max. 1200

6.7.4 Holder rotation

CAUTION
When working at machines with rotating parts, take care to prevent clothes and/or hair from being caught by the rotating parts.

Rotation

Rotation is generally used when cutting round workpieces. By moving the surface of the cut, the feed speed and cut-off wheel speed can be increased without causing excess heat buildup.

The specimen will also have a more uniform scratch pattern on the surface and a better planeness.

Additionally, the burr at the end of a cut will occur in the middle of the specimen. This will make it easier to remove the burr during the following preparation.

Oscillation

Oscillation is useful when cutting very hard materials as it will reduce the heat buildup.

Oscillation is also used for fragile materials as there is a better distribution of the force used to cut through the workpiece.

Settings

– **Off**: The holder does not rotate.

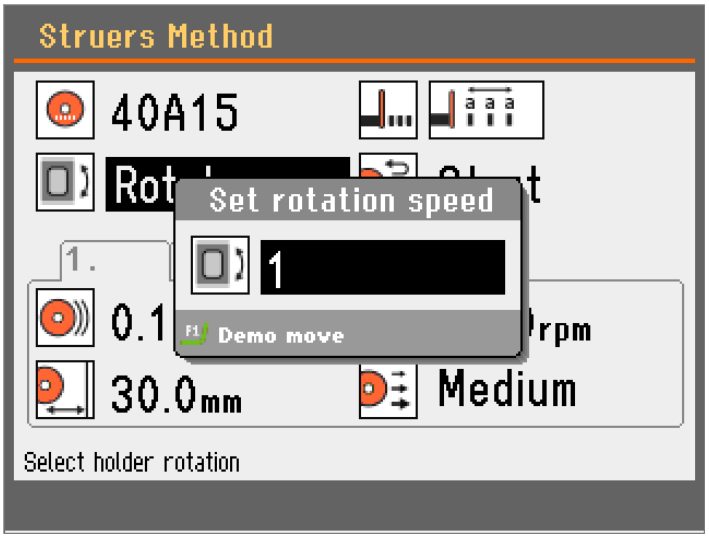

– **Rotate**: The workpiece rotates around its center.

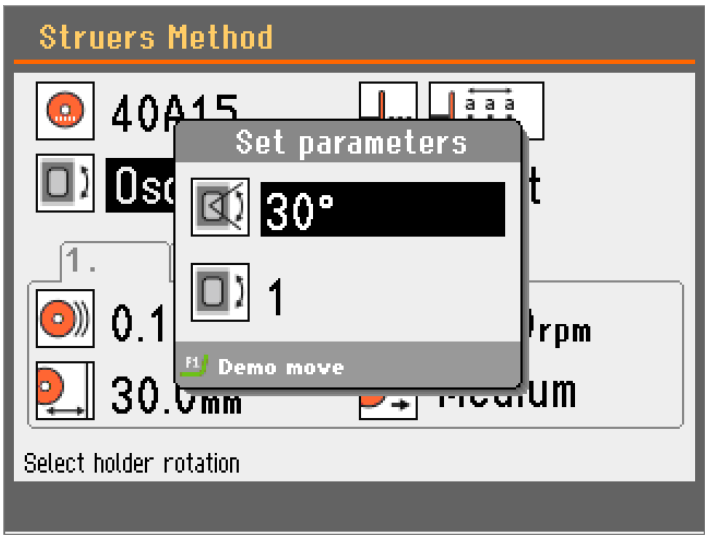

– **Oscillate**: The holder oscillates around its center.

For a demonstration of the movement:

1. Press F1 to start Oscillation and check for correct alignment.
2. Press F1 again to stop the movement.

6.7.5 OptiFeed

During cutting, the machine continuously measures the load on the motor. The factors that determine the load are the shape and properties of the workpiece.

Whenever the maximum allowed motor load is reached, the OptiFeed function automatically reduces the feed speed.

As soon as the load drops below the set limit, the speed will be increased to the original setting.

Note
If you want to cut similar workpieces afterward, reduce the feed speed to the new value or lower.

Force level	OptiFeed is activated at a motor load of:
Low	45%
Medium	60%
High	100%

6.7.6 Optimize the cutting results

Objective	Recommendation
Better cutting	Clamp the workpiece securely using the correct specimen holder.
Better surface quality	Use the lowest recommended feed speed, the highest recommended wheel speed and no specimen holder rotation.
Lower wheel wear	Make sure that you use the correct concentration of additive in the coolant. Use the lowest recommended feed speed, the highest recommended wheel speed and no specimen holder rotation. This is especially important when using resin bonded wheels and all abrasive cut-off wheels.

Objective	Recommendation
Solve problems with abrasive cut-off wheels	Abrasive cut-off wheels should not be used outside their recommended feed speed range. At lower than recommended feed speeds, they will produce irregularly cut surfaces. At higher feed speeds, excessive wheel wear will occur along with increased risk of wheel breakage.
Flatter specimens	Use primarily low feed speeds, highest recommended wheel speed, largest possible flanges and no specimen holder rotation. The initial cut is especially critical. If the initial feed speed is too high, the wheel will bend and start cutting at an angle. Such a cut will never end up flat.
Better parallelism	Use the lowest recommended feed speed.
Faster cutting	Orient the workpiece so that the wheel will cut the smallest possible cross-section and then use the maximum recommended feed speed.
Cutting composite materials	Use the lowest recommended force level for the materials in the composite. See Material guide ► 37.

6.8 Start the cutting process

Clamp the workpiece

- Secure the workpiece in the specimen holder.

When cutting with rotation or oscillation, the workpiece and the specimen holder must be clamped so that they rotate evenly around the center of the workpiece. This way the fastest cutting is obtained as the cut-off wheel will be cutting most of the time and the possibility of damaging the cut-off wheel is limited.

Note
To avoid damage, make sure that the workpiece or specimen holder cannot come in contact with the cut-off wheel or the coolant nozzles.

Position the workpiece

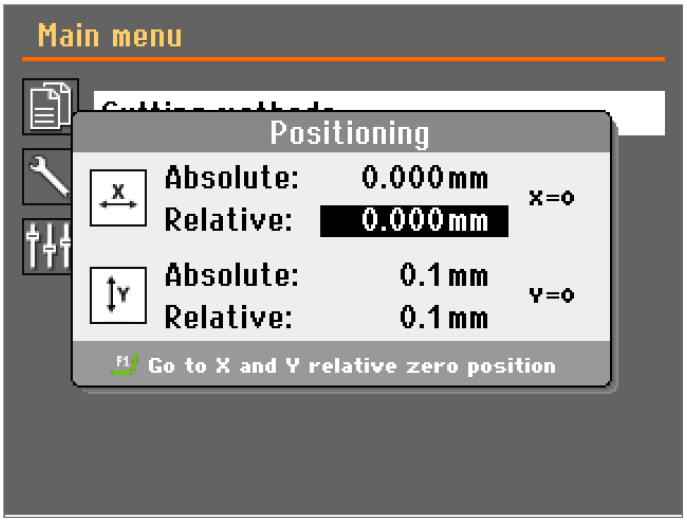

1. Use the hold-to-run button and the positioning keys to move the workpiece into the correct start position, close to the cut-off wheel.

> **Note**
> Check that there are no obstacles in the cutting chamber before starting the cutting process.

> **Note**
> Check the basket and the magnet for cutting debris before starting the cutting process to secure sufficient cooling.
> A blocked drain can result in water overflow and too little water in the tank .

2. Close the guard.
3. Press Start.

> **Note**
> Check that there is a steady flow of coolant from the nozzles.

6.8.1 The cutting process screen

A	Method	**F**	Timer countdown
B	Feed speed	**G**	Set values
C	Rotational speed	**H**	Actual values
D	Cutting length	**I**	Progress bar
E	Motor load		

Manual stop

The machine stops automatically when the cutting process is complete, but you can stop the process at any time during the operation by pressing Stop.

Press Start to resume cutting.

Change parameters during the cutting process

You can change the following parameters during the cutting process:

- Feed speed
- Rotational speed
- Cutting length

Hint
If, for example, the motor load is too great, you can reduce the feed speed.

1. Select the parameter you want to change.
2. Press Enter and change the value.
3. Press Enter to confirm the change or press Esc to cancel.

Retract the workpiece

To retract the cut-off wheel from the workpiece while cutting is in progress:

1. Press Stop to interrupt the cutting process.
2. Press the Backward positioning key to move the wheel spindle away from the holder.
3. Press Start to resume cutting. The cut-off wheel will then start to move forward with the preset feed speed.

OptiFeed

See OptiFeed ► 41.

6.9 Flushing hose

The machine is delivered with a flushing system for cleaning the cutting chamber of debris discarded during the cutting process. Flushing is operated from the control panel.

CAUTION
Avoid skin contact with the coolant additive.
Always wear protective gloves and safety goggles.

CAUTION
Do not start flushing before the flushing hose is pointing into the cutting chamber.

Procedure

CAUTION
Mind the protruding safety catch when the safety guard is raised.

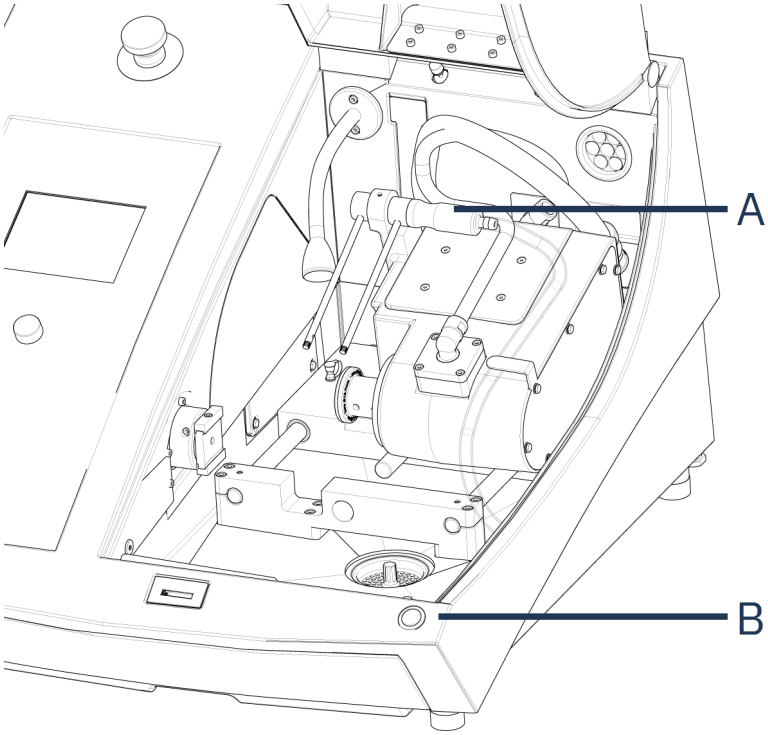

A	Flushing hose	**B**	Hold-to-run button

1. Remove the hose from the coolant nozzles.

2. On the control panel, press **Flush**.
3. Point the hose into the cutting chamber.
   - To start flushing, press and hold the Hold-to-run button.
   - To stop flushing, release the Hold-to-run button.
4. When you have finished flushing the cutting chamber, place the hose in its holder.

7 The Maintenance menu

From the **Maintenance** screen you can choose between the following options:

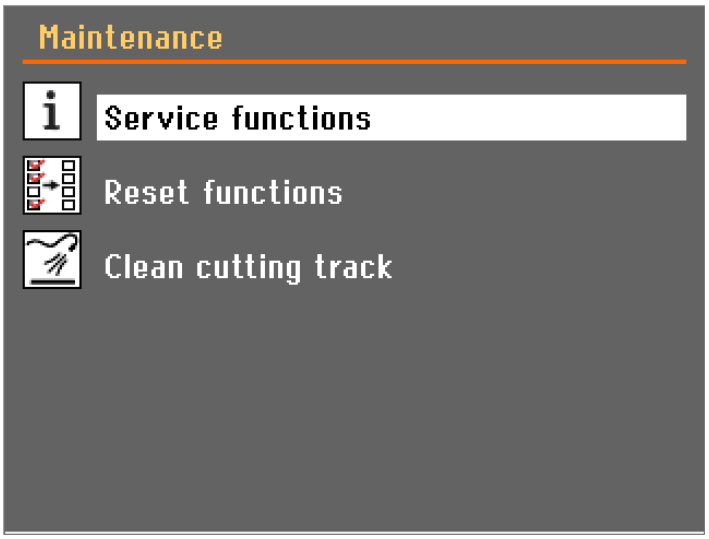

Service functions	Information about the equipment. This information is mainly used in connection with service. See The Service menu ► 46.
Reset configuration	You can reset all cutting methods, grinding methods or the parameters in the **Configuration** menu to default values.
Clean cutting tank	Moves the cutting motor its full movement range backwards and forwards to keep the cutting track free from debris.

7.1 The Service menu

Service information is read-only information. The machine settings cannot be changed.

Service information can be used in cooperation with Struers Service for remote diagnostics of the equipment.

The service information is available only in English.

Information on total operation time and servicing of the machine is displayed on the screen at start-up.

8 The Configuration menu

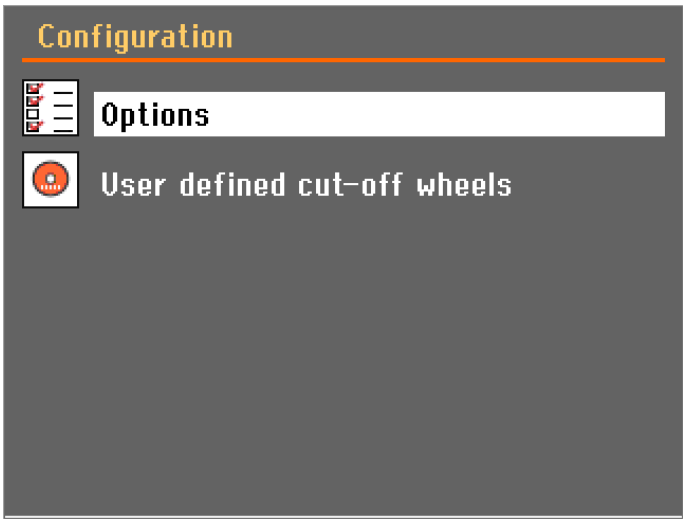

8.1 Options menu

From the **Options** menu you can set up general parameters.

1. From the **Main menu** select **Configuration**.
2. Select **Options**.

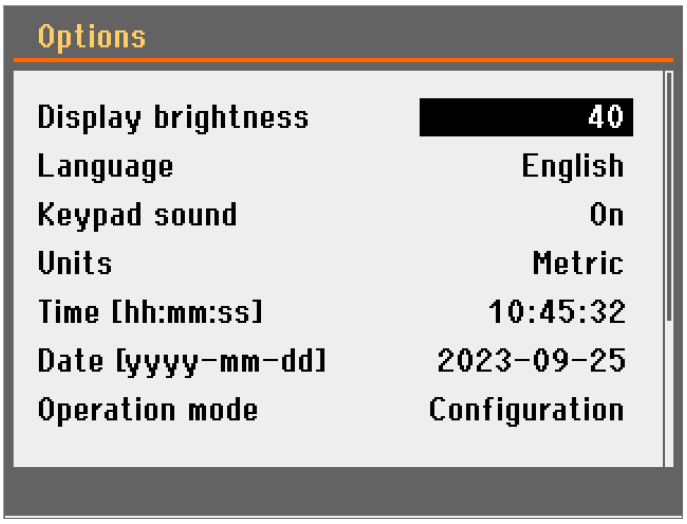

Parameters	Settings
Display brightness	You can adjust the display to make it easier to view.
Language	Select the language you wish to use in the software.
Keypad sound	When you press a button on the control panel, a sound is heard.

Parameters	Settings
Units	Select the unit system: – Metric (default) – Imperial
Time	Set the time
Date	Set the date.
Operation mode	You can select two different operation modes: – **Configuration** – **Production**
Use water	Select **Yes** or **No** We recommends that the coolant is set to **Yes** while cutting and grinding.
Align before process	Select the type of alignment action. Can be set to: – **No**: No alignment action. – **Align X**: Shifts the X-axis slightly to the left and back to the right (to the original position), to compensate for mechanical hysteresis of the axis. This setting does not compensate for lost axis steps on the machine. **Hint** We recommend that you use the **Align X** option for better grinding/cutting accuracy.

Change the operation mode

1. Select **Operation mode**.

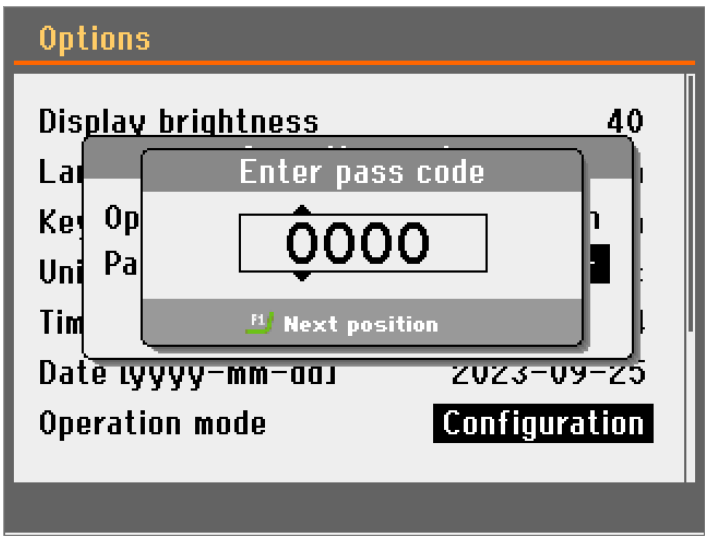

2. Select **Pass code**.

3. Use the F1 key and the knob to enter the current pass code.

> **Hint**
> The default pass code is: 2750.

4. Push the knob.

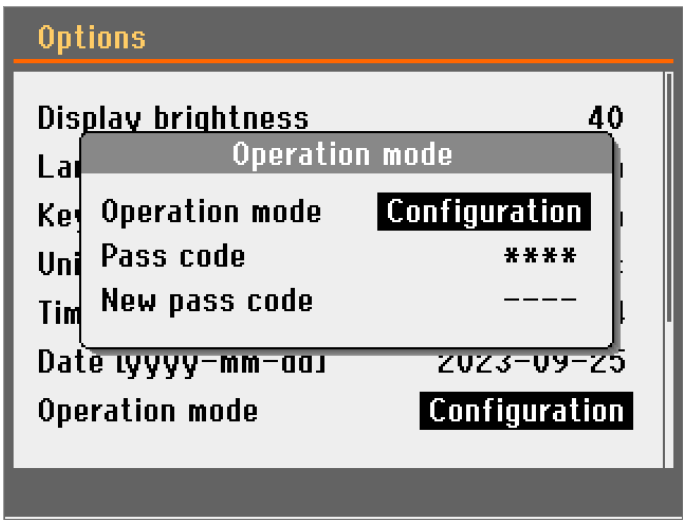

5. Select **Operation mode**.
6. Select an operation mode.

Parameters	Settings
Configuration	Full functionality
Production	Access to: – Start – Stop – Stop position and movement of the cut-off wheel – **Display brightness** – **Keypad sound**

New pass code

> **Note**
> When you set a pass code, you have five attempts to enter the correct pass code after which the machine will be locked.
> Restart the machine using the main switch, then enter the correct pass code.

> **Note**
> Remember to make a note of the new pass code, since you cannot change the settings without the pass code.

8.2 User defined cut-off wheels

Procedure

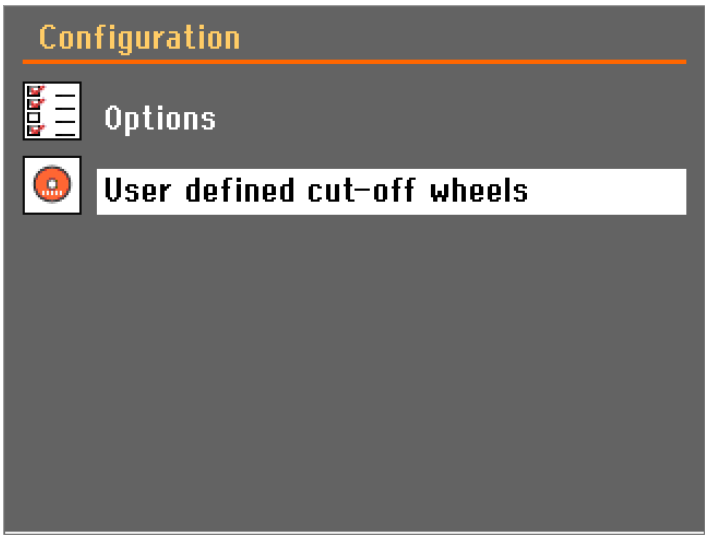

1. From the **Configuration** screen, select **User defined cut-off wheels**.

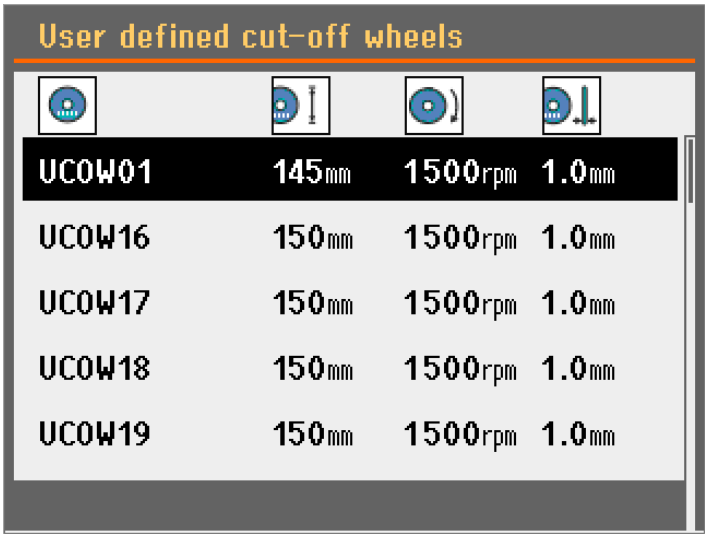

2. Press F1. A pop-up menu appears.

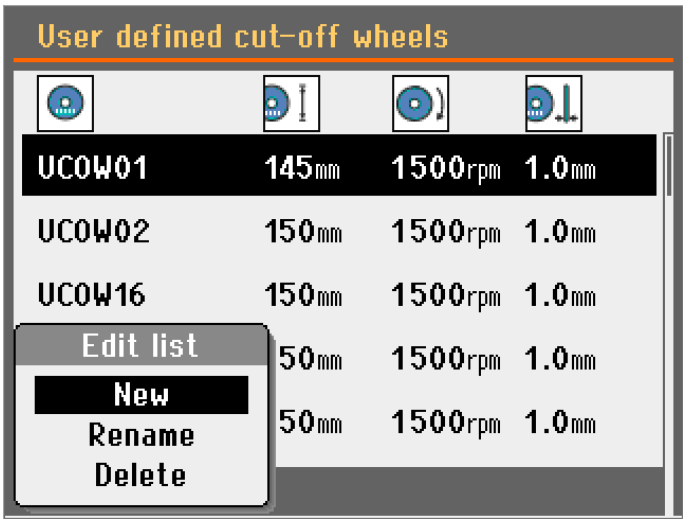

3. Select **New**.
4. Press F1 and select **Rename**.
5. Use the knob and the Backward and Forward keys to enter a name for the new cut-off wheel (Press F1 to toggle between upper and lower-case letters). If needed, press Esc to cancel the changes.

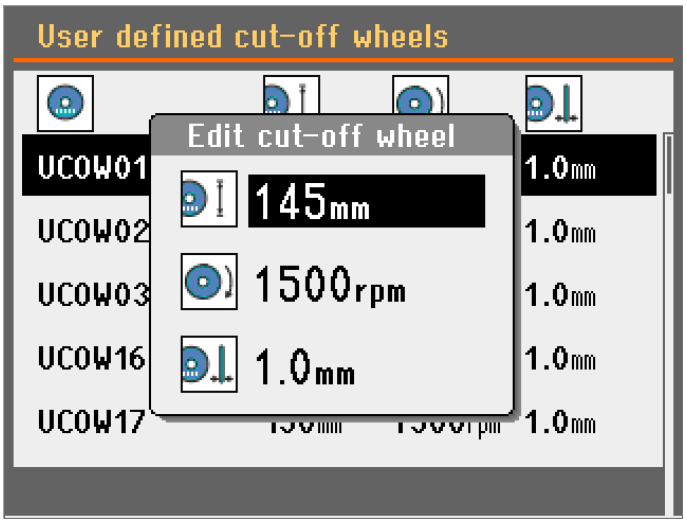

6. Select the wheel and enter the settings.

9 Maintenance and service

Proper maintenance is required to achieve the maximum up-time and operating lifetime of the machine. Maintenance is important in ensuring continued safe operation of your machine.

The maintenance procedures described in this section must be carried out by skilled or trained personnel.

Safety Related Parts of the Control System (SRP/CS)

For specific safety related parts, see the section "Safety Related Parts of the Control System (SRP/CS)" in the section "Technical data" in this manual.

Technical questions and spare parts

If you have technical questions or when you order spare parts, state the serial number and the voltage/frequency. The serial number and the voltage are stated on the name plate of the machine.

9.1 General cleaning

To ensure a longer lifetime for your machine, we strongly recommend regular cleaning.

Note
Clean the cutting chamber daily and if the machine is not to be used for a period of time.

Note
Do not use a dry cloth as the surfaces are not scratch resistant.

Note
Do not use acetone, benzol or similar solvents.

If the machine is not to be used for a long period of time

- Clean the cutting chamber thoroughly.
- Clean the machine and all accessories thoroughly.

9.2 Cut-off wheels

Hint
See the instruction manual supplied with the cut-off wheels for detailed maintenance instructions.

Abrasive cut-off wheels

Abrasive cut-off wheels are sensitive to humidity. Therefore, do not mix new, dry cut-off wheels with used, humid ones. Store the cut-off wheels in a dry place, horizontally on a plane support.

Maintenance of diamond and CBN cut-off wheels

To ensure the precision of diamond and CBN cut-off wheels (and consequently the cut), follow these instructions carefully.

1. Never expose the cut-off wheel to a heavy mechanical load or heat.
2. Store the cut-off wheel in a dry place, horizontally on a plane support, preferably under light pressure.
3. A clean and dry cut-off wheel does not corrode. Therefore, clean and dry the cut-off wheel before storing. If possible, use ordinary detergents for cleaning.
4. Regular dressing of the cut-off wheel is part of the general maintenance.

Dressing diamond and CBN cut-off wheels

Hint
Do not perform more dressing than necessary as this will cause needless wear on the wheel.

Hint
A badly dressed cut-off wheel is the most frequent reason for damage to the wheel.

A newly dressed cut-off wheel will give an optimal cut. A badly maintained and dressed cut-off wheel demands a higher cutting pressure that will result in more frictional heat.

The wheel may also bend and cause a skew cut.

A combination of both factors may result in damage to the cut-off wheel.

To dress the cut-off wheel, use the aluminum oxide dressing stick supplied with the cut-off wheel.

There are two methods to dress a cut-off wheel:

Method 1

1. Clamp the dressing stick like you would clamp a workpiece.
2. Use a moderate feed speed and plenty of coolant to cut through the dressing stick.
3. Repeat the treatment if the cut-off wheel does not cut satisfactorily.

Method 2

- Use a manual dresser.

Test your cut-off wheels

Cut-off wheels must be tested before use.

Test an abrasive cut-off wheel for damage

1. Visually inspect the surface for cracks and chips.
2. Mount the cut-off wheel, close the guard and let the wheel rotate at full speed.

If there is no visible damage and the cut-off wheel did not break during the high-speed test, it has passed the test. If the cut-off wheel shows cracks, it is unsafe to use and must be replaced.

Test a diamond/CBN cut-off wheel - the ring test

To test a diamond/CBN cut-off wheel, perform a ring test.

1. Let the cut-off wheel hang over your index finger.
2. With a pencil (not metal), gently tap the cut-off wheel around the edge.
3. The cut-off wheel passes the test if it gives a clear metallic tone when tapped. If the cut-off wheel sounds dull or muted, it is cracked and unsafe to use and must be replaced.

9.3 Change the coolant pump tubes

Procedure

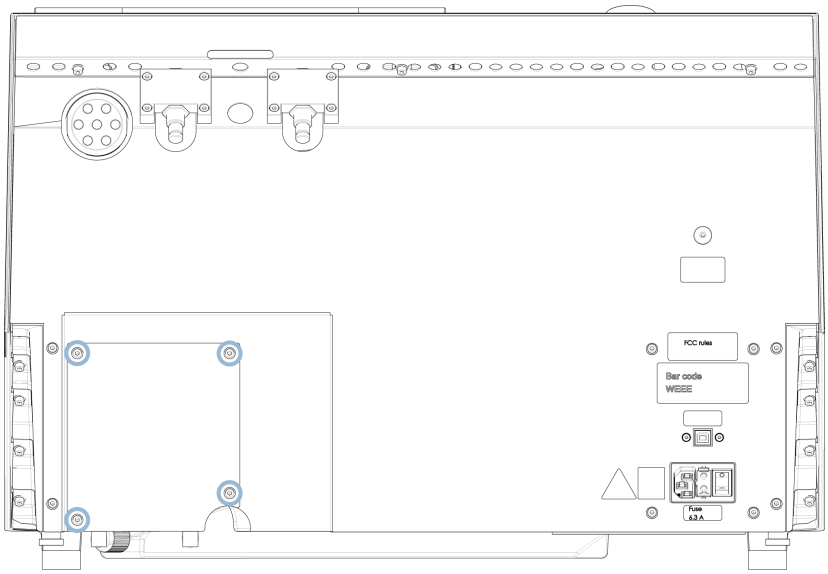

1. Remove the four screws on the protection plate on the rear of the machine.

2. Remove the three screws on the cover of the cooling pump.

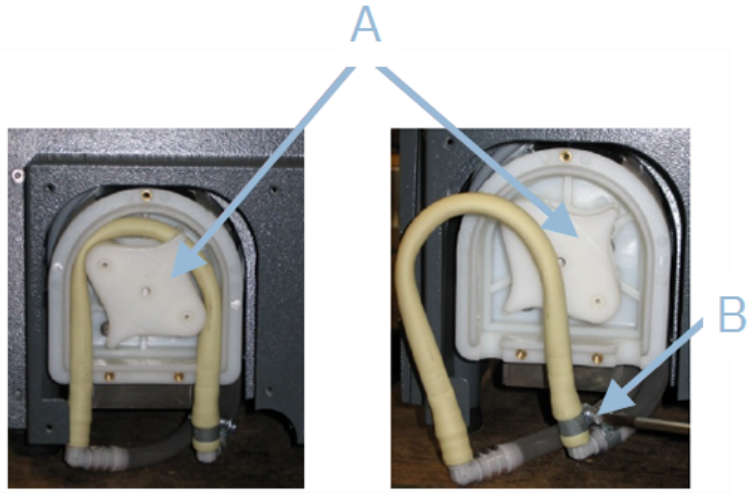

A Pump axle	**B** Hose clamp

3. Remove the tube from the pump axle.
4. Loosen the hose clamp and carefully remove the tube ends from the connectors.
5. Attach the new tube to the connectors and tighten the hose clamp. The hose clamp should be on the end of the tube that directs water into the cutting chamber, as this will have the greatest pressure.
6. Lubricate the tube along its length with the supplied silicone grease. This will help the rollers in the pump to turn smoothly.
7. Press the tube into position around the pump axle.
8. Mount the tube correctly in the pump

Correct

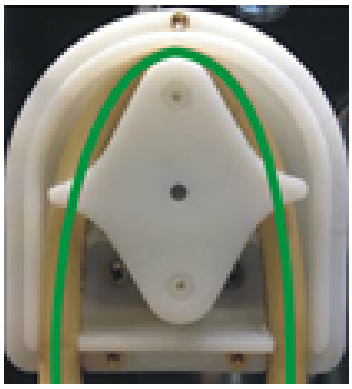

Incorrect

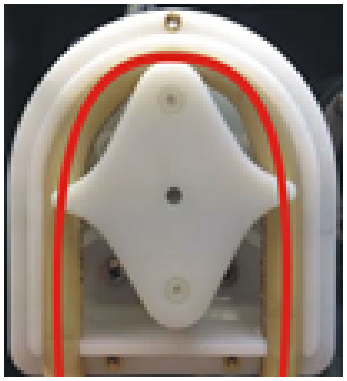

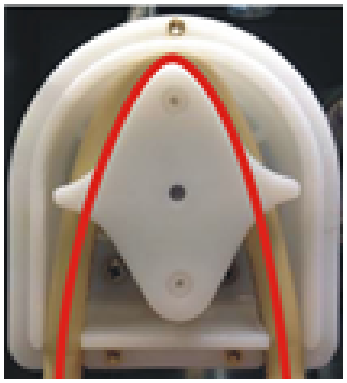

The pump tube is too loose

Excess volume between the rollers will press "waves" of fluid which will stretch the tube.

The lifetime of the tube will be reduced.

The pump tube is too tight

The tube is stretched.

The lifetime of the tube will be reduced.

9. Remount the bottom cover.
10. Remount the protection plate.

9.4 Daily

- Check the machine before use. Do not use the machine until any damage is repaired.

Check the guard

WARNING
Replace the guard immediately if it has been weakened by collision with projectile objects or if there are visible signs of deterioration or damage.

- Visually inspect the guard for signs of wear or damage (e.g. dents, cracks, damage to the edge sealing).
- If the guard is damaged, replace it. See The guard ► 61.

Checking the guard safety lock

Note
Check the interlock tongue regularly to make sure that it is not is not damaged and that it fits perfectly in the locking mechanism.

- Make sure that the interlock tongue slides easily into the locking mechanism.

Daily maintenance

CAUTION
Read the Safety Data Sheet for the additive for coolant before use.

CAUTION
Avoid skin contact with the coolant additive.
Wear suitable gloves to protect fingers from abrasives and hot/sharp specimens. Coolant can contain swarf (cutting debris or other particles.

CAUTION
Do not start flushing until the flushing hose is pointing into the cutting chamber.

Note
Never use acetone, benzol or similar solvents.

Hint
Do not use a dry cloth as the surfaces are not scratch resistant.

Hint
If needed, use ethanol or isopropanol to remove grease and oil.

- Clean all accessible surfaces with a soft, damp cloth.
- Clean the cutting chamber, particularly the T-slot cutting table.
- If needed, clean the drain basket and the magnet in the tank.
- Clean the specimen holder, the clamps for the dovetail feed and the flanges.
- Leave the guard open when the machine is not in use to let the cutting chamber dry completely.

9.5 Weekly

Clean the machine to prevent the machine and specimens from being damaged by abrasive grains or metal particles.

Note
Do not use harsh or abrasive cleaning agents.

- Clean all accessible surfaces with a soft damp cloth and common household detergents.
- For heavy duty cleaning, use Struers Cleaner.
- Clean the safety guard with a soft damp cloth and a common, household anti-static window cleaning agent.

Note
To prevent excess foaming from occurring, make sure that no detergent or cleaning agent residue is flushed into the cooling unit tank.

9.5.1 Clean the cutting chamber

1. Remove the specimen holder.
2. Clean the specimen holder: movable parts, dovetail feeds and screws.
3. Lubricate the specimen holder with oil (e.g. with a universal household oil).
4. Store the specimen holder in a dry place.
5. Clean the chamber, the tray and guard thoroughly.
6. Check the drain basket and the magnet.

Note
A blocked drain can result in overflow and insufficient cooling if the level of fluid in the tank is too low. This can damage the workpiece or the cut-off wheel.

7. Oil the wheel spindle/bushing where the wheel is mounted (e.g. with a universal household oil).

Clean the cutting track

1. Remove all obstacles from the cutting chamber.
2. Close the guard.
3. Select **Clean cutting track** from the menu.

9.5.2 Check the coolant tank

CAUTION
Read the Safety Data Sheet for the additive for coolant before use.

CAUTION
Avoid skin contact with the coolant additive.
Wear suitable gloves to protect fingers from abrasives and hot/sharp specimens. Coolant can contain swarf (cutting debris or other particles.

Hint
We recommend that you change the coolant at least once a month to prevent the growth of microorganisms.

- Check the coolant level after 8 hours of use or at least every week. If needed, refill the tank.
- Replace the coolant if it appears to be contaminated (build-up of cutting debris).
- Add coolant additive.
- Use a refractometer to check the concentration of additive. See the instructions for use on the label.

Coolant nozzles

- If the coolant nozzles are blocked, clear the blockage with a thin piece of wire (e.g. a paper clip).

Hint
You can remove the screw from the tip of the right nozzle to facilitate cleaning.

9.5.3 Tube for water-free coolant

If you are using water-free coolant, you must replace the tube in the coolant pump with a special tube for water-free coolant. The tube for water-free coolant is more resistant to the components of the water-free coolant. The standard tube only lasts for a few hours, as it is affected by the water-free coolant.

For details on changing the pump tube, see Change the coolant pump tubes ► 54.

Note
If you have mounted the tube for water-free coolant, check it for wear regularly.
The frequency for changing the tube varies depending on specific conditions. We recommend that you visually check the tube for wear after every 5 hours of use.

9.6 Monthly

9.6.1 Clean the coolant tank

Replace the coolant in the coolant tank at least once a month.

CAUTION
Read the Safety Data Sheet for the coolant additive before use.

CAUTION
Avoid skin contact with the coolant additive.
Wear suitable gloves and safety goggles when handling coolant.
Coolant can contain swarf (cutting debris or other particles.

CAUTION
Do not start flushing until the flushing gun points into the cutting chamber.

Procedure

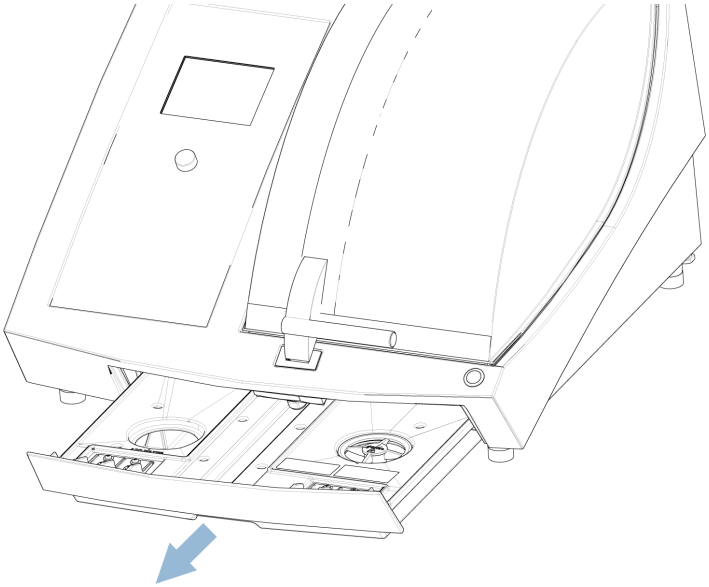

1. Slide out the coolant tank gently.
2. Remove the screw cap.
3. Pour out the used coolant into a drain approved for waste chemicals.
4. Rinse the tank with clean water. Shake the tank occasionally to release any debris that has accumulated on the bottom of the tank.
5. Repeat the rinsing process until the tank is clean.
6. Refit the screw cap.
7. Slide the tank back into position.
8. Fill the tank through the hole in the base of the chamber with a 4% solution of coolant additive: 190 ml coolant additive and 4.5 L water.

Hint
For water-sensitive materials, use a water-free coolant.

Note
Do not overfill the tank.

Note
Flush the recirculation cooling system with clean water if the machine is not to be used over longer periods of time. This will prevent any dried residue of cutting material from damaging the inside of the pump.

Note
Flush the recirculation cooling system with clean water if the machine is not to be used for a longer period of time. This will prevent any dried-up residue of cutting material from damaging the inside of the pump.

9.7 Annually

9.7.1 The guard

WARNING
Do not use the machine with defective safety devices.
Contact Struers Service.

WARNING
To ensure its intended safety, the guard must be replaced every 3 years. A label on the guard indicates when it is due to be replaced.

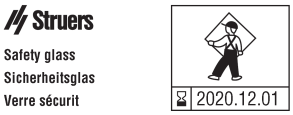

Note
Replace the guard immediately if it has been weakened by collision with projectile objects or if there are visible signs of deterioration or damage.

Note
If the machine is used for more than one 7-hour shift per day, carry out inspection more often.

Note
The screen must be replaced to remain compliant with the safety requirements stated in EN 16089.

The guard consists of a metal frame and a composite material that protects the operator. If the guard is damaged, it will be weakened and will offer less protection.

Procedure

1. Visually inspect the guard for signs of wear or damage such as cracks or dents.
2. If the guard is damaged, replace it immediately.

9.7.2 Test the safety devices

The safety devices must be tested at least once a year.

WARNING
Do not use the machine with defective safety devices.
Contact Struers Service.

Note
Testing should always be performed by a qualified technician (electromechanical, electronic, mechanical, pneumatic, etc.).

The guard has a safety switch system to prevent the cut-off wheel motor from starting when the guard is open.

A locking mechanism prevents the operator from opening the guard until the motor stops spinning.

Emergency stop

WARNING
Do not use the machine with defective safety devices.
Contact Struers Service.

Test 1

1. Start a cutting process: Press the Start button. The machine starts operating.
2. Press the emergency stop.
3. If operation does not stop, press the Stop button.
4. Contact Struers Service.

Test 2

1. Press the emergency stop.
2. Press the Start button.
3. If the machine starts, press the Stop button.
4. Contact Struers Service.

The guard lock

WARNING
Do not use the machine with defective safety devices.
Contact Struers Service.

Test 1

1. Start a cutting process: Press Start. The machine starts operating.
2. Try to open the guard – do not use force.
3. If the guard opens, press Stop.

4. Contact Struers Service.

Test 2

1. Open the guard.
2. Press Start.
3. If the machine starts, press the Stop button.
4. Contact Struers Service.

Test 3

1. Start a cutting process: Press Start. The machine starts operating.
2. Press Stop. If it is possible to open the guard while the cut-off wheel still rotates, contact Struers Service.

The hold-to-run button

WARNING
Do not use the machine with defective safety devices.
Contact Struers Service.

Test 1

1. Open the guard.
2. Without pressing the hold-to-run button, use the keys to move the cutting arm.
3. If the cutting arm moves, contact Struers Service.

Test 2

1. Open the guard.
2. Without pressing the hold-to-run button, use the keys to move the cut-off wheel.
3. If the cut-off wheel moves, contact Struers Service.

Test 3

1. Open the guard.
2. Press Flush.
3. If coolant starts to flow, press Flush or Stop and contact Struers Service.

9.8 Spare parts

Technical questions and spare parts

If you have technical questions or when you order spare parts, state the serial number and the voltage/frequency. The serial number and the voltage are stated on the name plate of the machine.

For further information, or to check the availability of spare parts, contact Struers Service. Contact information is available on Struers.com.

Spare parts list

Spare part	El. Ref.	Cat. no.
Interlock locking device	YS1	2SS00025
Frequency inverter	A2	2PU32056
Emergency stop button	S1	2SA10400
Emergency stop contact	S1	2SB10071
Module holder	S1	2SA41605
Guard	-	16170044
Magnetic safety sensor	SS1	2SS00130
Safety relay unit	KS1, KS3	2KS10006
Speed monitoring card	KS2, KS4	2KS10034
Speed sensor - Main motor	HQ3, HQ4	2HQ50502
Speed sensor - Y-movement	HQ5, HQ6	2HQ00032
Hold-to-run button	S2	2SA00025
Lock relay, liquid relay	K1, K2	2KL23851

9.9 Service and repair

Information on total operation time and servicing of the machine is displayed on the screen at start-up.

We recommend that a regular service check be carried out yearly or after every 1500 hours of use.

When the machine is started up, the display shows information about total operation time and the machines service information.

After 1400 hours of operation time, the display will show a message reminding the user that a service check should be scheduled.

When 1500 hours of operation time has been exceeded, the display will show the message **Service period expired**.

Note
Service must only be performed by a qualified technician (electromechanical, electronic, mechanical, pneumatic, etc.).
Contact Struers Service.

Service check

We offer a range of comprehensive maintenance plans to suit the requirements of our customers. This range of services is called ServiceGuard.

The maintenance plans include equipment inspection, replacement of wear parts, adjustments/calibration for optimal operation, and a final functional test.

The Maintenance menu

See The Maintenance menu ► 45.

The menu

See The Service menu ► 46.

9.10 Disposal

Equipment marked with a WEEE symbol contains electrical and electronic components and must not be disposed of as general waste.

Contact your local authorities for information on the correct method of disposal in accordance with national legislation.

For disposal of consumables and recirculation fluid, follow local regulations.

WARNING
In case of fire, alert bystanders, the fire brigade and cut power. Use a powder fire extinguisher. Do not use water.

Note
The recirculation fluid will contain additive and cutting or grinding swarf.
Do not dispose of the recirculation fluid into a main drain.
Follow the current safety regulations for handling and disposal of swarf and additive for recirculation fluid.

Keep track of which metals you cut or grind and the amount of swarf produced.

Depending on which metals you cut or grind, it is possible that the combination of the metallic swarf from metals with a large difference in electropositivity, can result in exothermic reactions when favorable conditions are present.

Examples:

The following are examples of combinations which can result in exothermic reactions if a large amount of swarf is produced during cutting or grinding on the same machine, and when favorable conditions are present:

- Aluminum and copper
- Zinc and copper

10 Troubleshooting

10.1 Machine problems

Problem	Cause	Action
No, or insufficient, coolant.	The level in the coolant tank is too low.	Make sure that there is sufficient water in the coolant tank.
	The coolant nozzles are blocked.	Clean the nozzles.
Water is leaking.	Leak in the coolant tube.	Check the coolant pump tube. If needed, replace the tube.
	Water overflow in the coolant tank.	Remove the excess water.
	The basket for cutting debris is blocked.	Clean the basket.
Workpieces are rusty.	There is insufficient additive in the coolant.	Check the concentration of additive in the coolant.
The cutting chamber is rusty.	There is insufficient additive in the coolant.	Check the concentration of additive in the coolant.
	The guard was left closed after use.	Leave the guard open to let the cutting chamber dry.
The cutting chamber shows signs of corrosion.	The workpiece is made of copper/copper alloy.	Use a coolant additive that is specifically formulated for copper and copper alloys.

10.2 Cutting problems

Problem	Cause	Action
Discoloration or burning of the workpiece.	The hardness of the cut-off wheel does not match the hardness/dimensions of the workpiece.	Select another wheel or reduce the rotational speed.
	Inadequate cooling.	Check the positioning of the coolant nozzles. If needed, clean the nozzles.
		Make sure that there is sufficient water in the coolant tank.
		Check the concentration of additive in the coolant.

Problem	Cause	Action
Unwanted burrs.	The cut-off wheel is too hard.	Select another wheel or reduce the rotational speed.
	The feed speed is too high at the end of the operation.	Reduce the feed speed towards the end of the operation.
	Incorrect clamping of the workpiece.	Support the workpiece and clamp it on both sides. Use a specimen holder that is designed for clamping small, long workpieces on both sides.
The cutting quality varies.	Inadequate cooling.	Check the positioning of the coolant nozzles. If needed, clean the nozzles.
		Make sure that there is sufficient water in the coolant tank.
		Check the concentration of additive in the coolant.
The cut-off wheel breaks.	Incorrect mounting of the cut-off wheel.	Make sure that the bore/centre hole has the correct diameter. The nut must be tightened properly.
	Incorrect clamping of the workpiece.	Support the workpiece and clamp it on both sides. Use a specimen holder that is designed for clamping small, long workpieces on both sides.
	The cut-off wheel is too hard.	Select another wheel or reduce the rotational speed.
	The feed speed is set too high.	Reduce the feed speed.
	The force level is set too high.	Reduce the force level.
	The cut-off wheel bends on contact with the workpiece.	Make an initial cut at a lower feed speed.
The cut-off wheel wears down too quickly.	The feed speed is too high.	Reduce the feed speed.
	The rotational speed is too low.	Increase the rotational speed.
	Insufficient cooling.	Make sure that there is enough water in the coolant tank. Check the positioning of the coolant nozzles. If needed, clean the nozzles.

Problem	Cause	Action
The cut-off wheel does not cut through the workpiece.	The rotational speed is too low.	Increase the rotational speed.
	Incorrect choice of cut-off wheel.	Select another cut-off wheel.
	The cut-off wheel is worn.	Replace the cut-off wheel.
The workpiece breaks when clamped.	The cut-off wheel gets caught in the workpiece during cutting.	Clamp the workpiece on both sides of the cut-off wheel so that the cut stays open. Use a specimen holder that is designed for clamping small, long workpieces on both sides.
	The workpiece is brittle.	Place the workpiece between two plastic/rubber plates or mount the workpiece in resin. **Note** Always cut brittle workpieces very carefully.
The specimen is corroded.	The specimen has been left in the cutting chamber for too long.	Remove the specimen directly after cutting. Leave the cutting chamber guard open when you leave the machine.
	Insufficient additive for coolant.	Check the concentration of additive in the coolant.

10.3 Error messages

Message number (#)	Explanation	Action
1		Restart the machine. If the error remains, contact Struers Service. Make a note of the **Reason** code displayed.
7	The guard is open when starting a process.	Close the guard to start the process. If the guard is closed, check that the safety lock release is reactivated.

Message number (#)	Explanation	Action
8		Restart the machine and enter the correct pass code. If you have forgotten the pass code, reset the machine to factory settings.
12	The database maximum storage capacity has been reached.	Delete one or more of the methods – this will free space to store new methods. **Note**: it is not possible to delete Struers methods.
15	Not enough space for the selected cut length.	**Auto**: the machine will cut to the max. available length. **Edit**: edit the length of cut or reposition the workpiece.
27		Restart the machine. If the error remains, contact Struers Service.
35		Wait until the motor has cooled down approx. 20-30 minutes and then continue with a lower load.
42		Check that the safety lock release is activated. Then restart the machine.
50		contact Struers Service. Make a note of the error code displayed.

11 Technical data

11.1 Technical data

Capacity	Height x Length	50 x 130 mm (2" x 5.1")
	Cutting length	40 mm/195 mm (1.6"/7.7") for 25 mm diameter
Cut-off wheel	Diameter	75 mm (3") - 150 mm (6")
	Arbor diameter	12.7 mm (0.5")

Grinding capacity	Height x Length	N/A
Motor	Rotational speed	300 - 3000 rpm, adjustable in steps of 50 rpm
	Cutting feed speed	Feed speed: 0.005 - 3 mm/s, adjustable in steps of 0.005 mm/s
	Positioning speed	Y = 13 mm/s
	Positioning length	Y direction: 110 mm (precision 0.1 mm)
Specimen holder arm	X-movement	Yes
	Rotation	Yes
	Oscillation	Yes
	Automatic rotation of specimen holder (before cutting)	No
	Positioning speed	X = 10 mm/s
	Positioning length	X direction: 60 mm (precision 0.005 mm)
Software and electronics	Controls	Touch pad, Turn/push knob
	Display	LCD, TFT-color 5.7", 320 x 240 dots with LED back light
Safety standards		See the Declaration of Conformity
REACH		For information about REACH, contact your local Struers office.
Operating environment	Surrounding temperature	5 - 40 °C (41 - 104 °F)
	Humidity	< 85 % RH non-condensing

Power supply	Voltage/frequency	200 - 240 V (50 - 60 Hz)
	Power inlet	1-phase (N+L1+PE) or 2-phase (L1+L2+PE) The electrical installation must comply with Installation Category II
	Power S1	1080 W
	Power S3	N/A
	Power, idle	45 W
	Current, max.	9.1 A
Cooling system	Built-in	4.75 L (1¼ gallon), 1.6 L/min (0.4 gallon/min)
Exhaust	Recommended capacity	30 m³/h (1060 ft³/h)
Advanced features	X-table, automatic	No
	X-stand, manual	No
	Rotary stand	No
Safety Circuit Categories/Performance Level	Guard safety switch system	PL d, Category 3 Stop category 0
	Guard lock	PL b, Category 3 Stop category 0
	Hold-to-run function	PL d, Category 3 Stop category 0
	Emergency stop	PL c, Category 1 Stop category 0
	Unintended start of fluid system	PL b, Category 3
	Speed monitoring - cut-off wheel/cup wheel consol movement	PL d, Category 3 Stop category 0
	Rotational speed of cut-off wheel/cup wheel monitoring	PL d, Category 3
Residual Current Circuit Breaker (RCCB)		N/A

Noise level	A-weighted sound emission pressure level at workstations	LpA = 67 dB(A) (measured value). Uncertainty K = 4 dB
Vibration level	Declared vibration emission	N/A
Dimensions and weight	Width	64.6 cm (25.4")
	Depth, with plug	78 cm (30.7") with plug
	Height, guard closed	44 cm (17.3"), guard closed
	Height, guard open	91 cm (35.8"), guard open
	Weight	68 kg (150 lbs)

11.2 Technical data - equipment units

For technical data covering the individual units of equipment, see the specific equipment manual.

11.3 Safety Related Parts of the Control System (SRP/CS)

WARNING

To ensure its intended safety, the guard must be replaced every 3 years. A label on the guard indicates when it is due to be replaced.

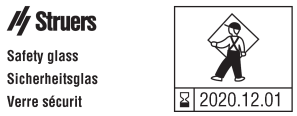

WARNING

Safety critical components must be replaced after a maximum lifetime of 20 years.
Contact Struers Service.

Note

SRP/CS (safety-related parts of a control system) are parts that have an influence on safe operation of the machine.

Note

Replacement of safety critical components must only be performed by a Struers engineer or a qualified technician (electromechanical, electronic, mechanical, pneumatic, etc.).
Safety critical components must only be replaced by components with at least the same safety level.
Contact Struers Service.

Safety related part	Manufacturer/Manufacturer description	Manufacturer catalog no.
Interlock locking device	Schmersal Solenoid interlock	AZM 170SK-11-02ZRK - 2197, 24 VAC/DC
Frequency inverter	Schneider Electric Freq.Inv. 1 x 200 - 240 V 550 W 200 - 240 V, 50/60Hz	ATV320U06M2C
Emergency stop button	Schlegel Latching mushroom head	ES Ø22 type RV
Emergency stop contact	Schlegel Modular contact, momentary	1 NC type MTO
Module holder	Schlegel Module holder. 5 elem. MHR-5	MHR-5
Guard	Struers	16170044
Magnetic safety sensor	Schmersal Magnetic safety sensor	BNS-120-02z
Safety relay unit	Omron Safety relay	G9SB-3012-A
Speed monitoring card	Reer Speed monitoring card	SV MR0
Speed sensor - Main motor	Balluff Temperature-rated inductive sensors	BES05RP
Speed sensor - Y-movement	Sick Inductive proximity sensors	IMB08-02BPSVU2K
Hold-to-run button	E-Switch	ULV7F2HSS341
Lock relay	Finder Relay interface modules	38.51.0.024.0060

Note
Struers catalogue numbers are listed in Spare parts ► 63.

11.4 Diagrams

Note
If you want to view specific information in detail, see the digital version of this manual.

Title Accutom-10	No.
Block diagram	16173052 ► 75
Water diagram	16171003 ► 76
Circuit diagram	See the diagram number on the name plate of the equipment, and contact Struers Service via Struers.com.

16173052

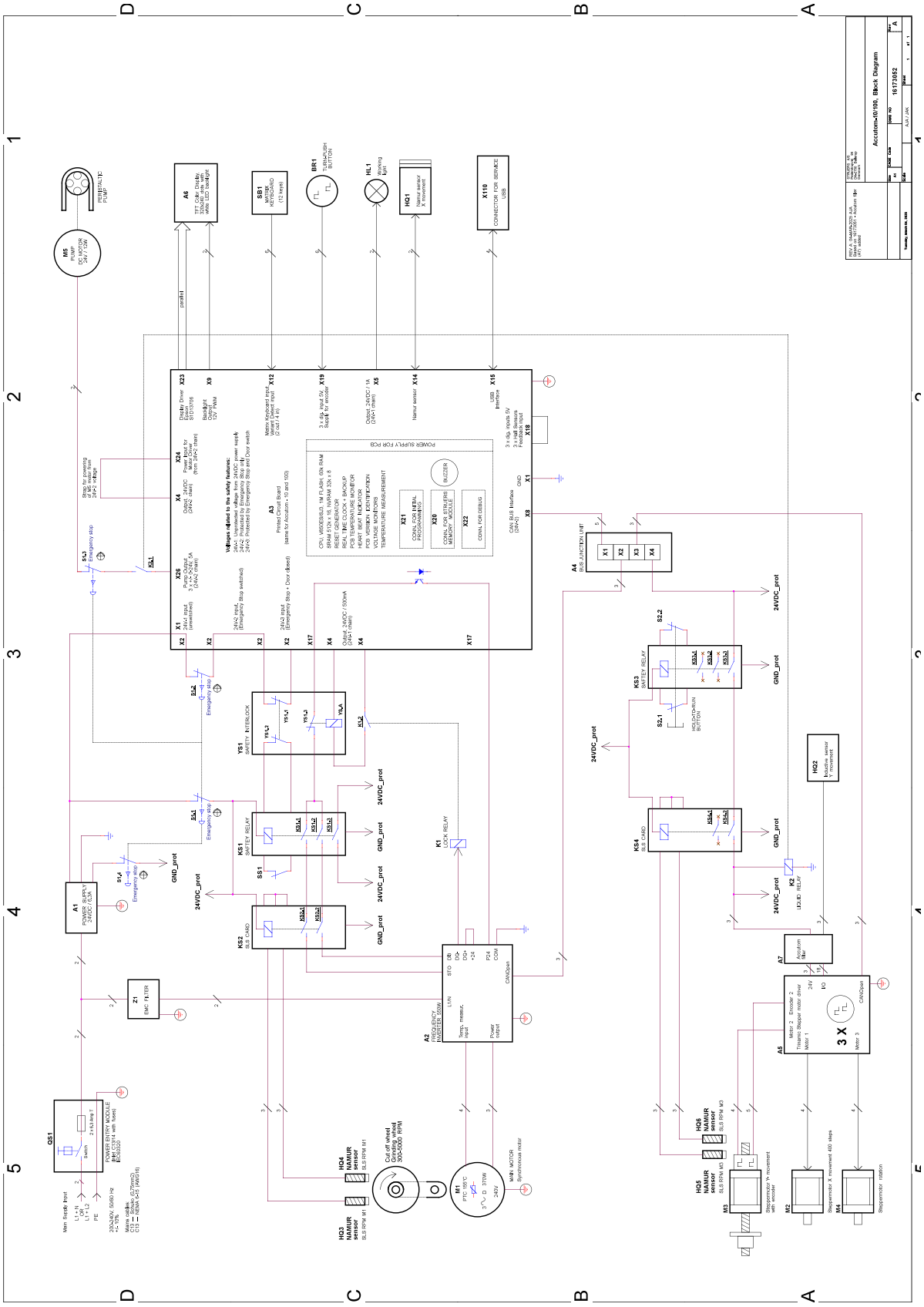
Accutom-10/100, Block Diagram
16173052
A1 POWER SUPPLY 24VDC / 120W
A2 FREQUENCY INVERTER 550W
A3 Printed Circuit Board
A4 BUS JUNCTION UNIT
A5 Tmaric Stepper motor driver
A6 TFT, Color Display, 320x240, 256k with white LED backlight
A7 Accutom Mini
K1 LOCK RELAY
K2 LATCH RELAY
KS1 SAFETY RELAY
KS2 SLS CARD
KS3 SAFETY RELAY
KS4 SLS CARD
M1 MAIN MOTOR Synchronous motor
M2 Stepperrotor X movement 400 steps
M3 Stepperrotor Y movement with encoder
M4 Stepperrotor rotation
M5 PUMP 120V/60Hz 24V / 12W
PERISTALTIC PUMP
QS1 POWER ENTRY MODULE (F14 with fuses)
Z1 EMC FILTER
YS1 SAFETY INTERLOCK
SB1 KEYPAD (12 keys)
BR1 TURNPUSH BUTTON
HL1 Working light
HQ1 Normal sensor X, Emergency
HQ2 Normal sensor Y, Emergency
HQ3 NAMUR sensor SLS RPM M1
HQ4 NAMUR sensor SLS RPM M1
HQ5 NAMUR sensor SLS RPM M3
HQ6 NAMUR sensor SLS RPM M3
X110 CONNECTOR FOR SERVICE USB
Cut off wheel (Operating speed 300-2000 RPM)
Main Supply Input
230VAC/V, 50/60 Hz +/- 10%
Mains cable: C13 — NEMA 5-15 (IEC320/C13)
C13 — NEMA 5-20 (IEC320/C13)
24VDC_prot
GND_prot
Emergency stop
Strip for powering up the system 24V2 - voltage
Voltages related to the safety features:
24V1- Unprotected voltage from 24VDC power supply
24V2- Protected by Emergency Stop and Door switch
24V3- Protected by Emergency Stop and Door switch
POWER SUPPLY FOR PCB
CPU, VBSES/BS/3, 1M FLASH, 68k RAM
SERIAL CHANNELS, 1k RAM 32k x 8
RESET GENERATOR
REAL TIME CLOCK + BACKUP
PCB TEMPERATURE MONITOR
VBSES/BS/3 FLASH PROTECTOR
PCB VERSION IDENTIFICATION
VOLTAGE MONITORS
TEMPERATURE MEASUREMENT
CONN. FOR INTAL PROGRAMMING
CONN. FOR STRIPERS MEMORY MODULE
CONN. FOR DEBUG
BUZZER
Main Keyboard input (Keypad, Keyboard)
3 x dig. input 5V Supply for encoder
Output 24VDC / 1A (24V1 chain)
Normal sensor X, Emergency
USB interface
3 x dig. inputs 5V 3 x Hall Sensors Supply output
CAN BUS Interface (24V3)
OUTPUT 24VDC / 500mA (24V4 chain)
Display Driver STD13706
Backlight 120VAC 12V PWM
Power Bus for Main Drives (max 20A per chain)
Output 24VDC (24V2 chain)
Pump Output 3 x AC-KS40, 0A (24VAC/Hall)
24V1 input (unswitched)
24V2 input (Emergency Stop switched)
24V3 input (Emergency Stop + Door-based)
Motor 1 Encoder 2
Motor 2
Motor 3
CANOpen
Temp. measur. input
Power output
STO
DB
DO+
DO-
+24
P24
COM
L1N
Accutom-10/100, Block Diagram
Tuesday, January 14, 2020
REV A - 24JAN2020 - AJA
REV A - 24JAN2020 - AJA - Initial release (AT) added

16171003

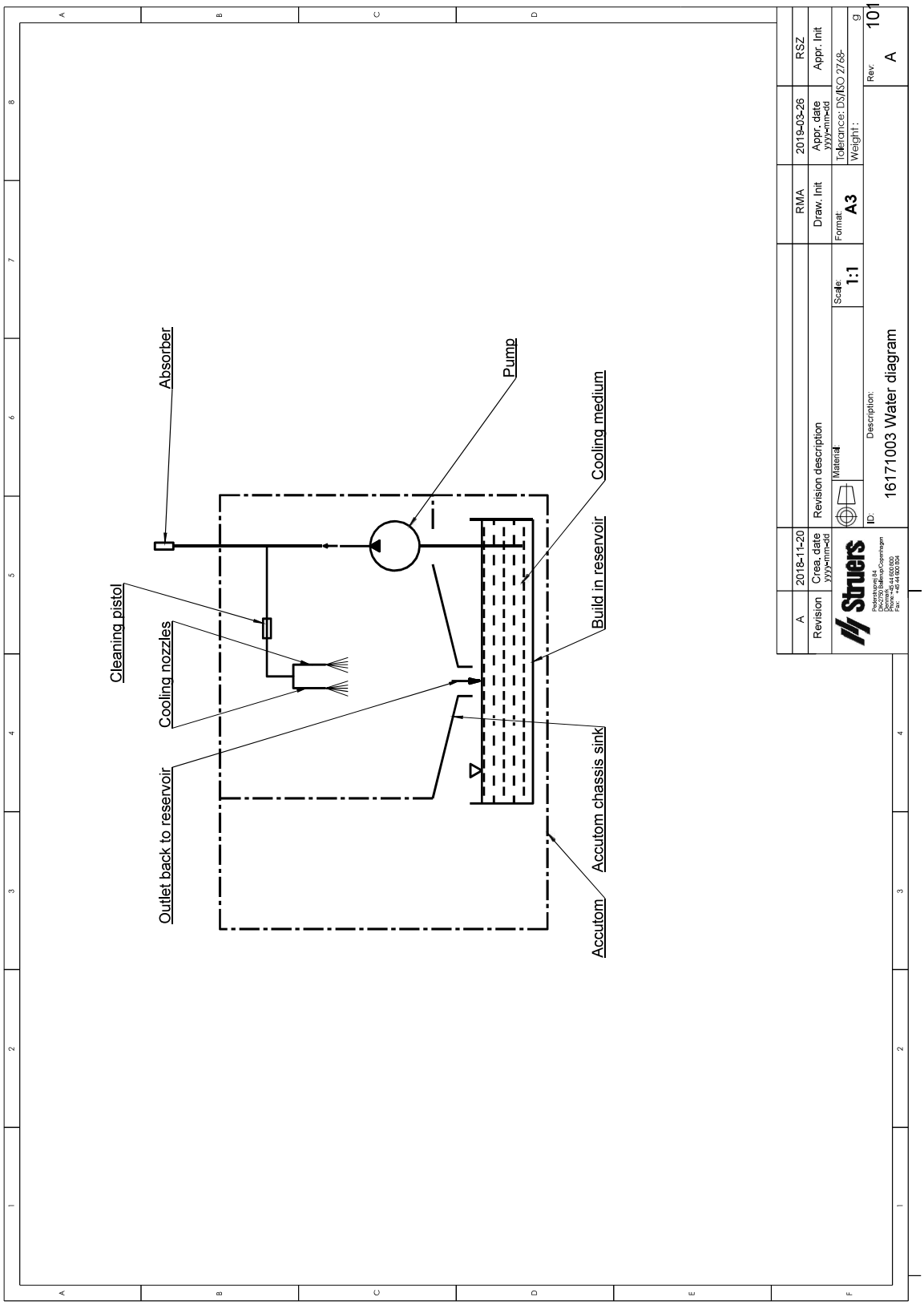
Absorber
Pump
Cooling medium
Cleaning pistol
Cooling nozzles
Build in reservoir
Outlet back to reservoir
Accutom chassis sink
Accutom
A
2018-11-20
Revision
Crea. date
yyyy-mm-dd
Revision description
Material:
Scale:
1:1
RMA
Draw. Init
Format:
A3
2019-03-26
Appr. date
yyyy-mm-dd
RSZ
Appr. Init
Tolerance: DS/ISO 2768-
Weight :
g
Rev:
A
101
ID:
Description:
16171003 Water diagram
Struers

11.5 Legal and regulatory information

FCC notice

This equipment has been tested and found to comply with the limits for a Class B digital device, pursuant to part 15 of the FCC Rules. These limits are designed to provide reasonable protection against harmful interference in a residential installation. This equipment generates, uses and can radiate radio frequency energy and, if not installed and used in accordance with the instructions, may cause harmful interference to radio communications. However, there is no guarantee that interference will not occur in a particular installation. If this equipment does cause harmful interference to radio or television reception, which can be determined by turning the equipment off and on, the user is encouraged to try to correct the interference by one or more of the following measures:

- Reorient or relocate the receiving antenna.
- Increase the separation between the equipment and receiver.
- Connect the equipment into an outlet on a circuit different from that to which the receiver is connected.

EN ISO 13849-1:2015

All SRP/CS are limited to a lifetime of 20 years. After expiration of this period, all components must be replaced.

12 Manufacturer

Struers ApS
Pederstrupvej 84
DK-2750 Ballerup, Denmark
Telephone: +45 44 600 800
Fax: +45 44 600 801
www.struers.com

Responsibility of the manufacturer

The following restrictions should be observed, as violation of the restrictions may cause cancellation of Struers legal obligations.

The manufacturer assumes no responsibility for errors in the text and/or illustrations in this manual. The information in this manual is subject to change without notice. The manual may mention accessories or parts not included in the supplied version of the equipment.

The manufacturer is to be considered responsible for effects on safety, reliability, and performance of the equipment only if the equipment is used, serviced, and maintained in accordance with the instructions for use.

Struers
Ensuring Certainty

Based on: 16287901 G

Declaration of Conformity

Manufacturer	Struers ApS • Pederstrupvej 84 • DK-2750 Ballerup • Denmark
Name	Accutom-10
Model	N/A
Function	Precision cut-off machine
Type	0628
Cat. no.	06286227
Module	A, according to global approach
Serial no.	

We declare that the product mentioned is in conformity with the following legislation, directives and standards:

2023/1213	EN ISO 12100:2010, EN ISO 13849-2:2012, EN ISO 13849-1:2023, EN ISO 13850:2015, EN ISO 16089:2015, EN 60204-1:2018, EN 60204-1-2018/Corr.:2020
2011/65/EU + 2015/863/EU	EN 63000:2018
2014/30/EU	EN 61000-6-2:2005/Corr.:2005, EN 61000-6-2:2005, EN 61000-6-3:2007, EN 61000-6-3-A1:2011, EN 61000-6-3-A1-AC:2012, EN 61000-3-3:2013, EN 61000-3-2:2014
Additional standards	NFPA 79, FCC 47 CFR Part 15 Subpart B

Authorized to compile technical file/
Authorized signatory

Date: [Release date]
Ballerup, Denmark

EU CE

Struers
Ensuring Certainty

en	For translations see
bg	За преводи вижте
cs	Překlady viz
da	Se oversættelser på
de	Übersetzungen finden Sie unter
el	Για μεταφράσεις, ανατρέξτε στη διεύθυνση
es	Para ver las traducciones consulte
et	Tõlked leiate aadressilt
fi	Katso käännökset osoitteesta
fr	Pour les traductions, voir
hr	Za prijevode idite na
hu	A fordítások itt érhetők el
it	Per le traduzioni consultare
ja	各種文書の翻訳版は次を参照
lt	Vertimai patalpinti
lv	Tulkojumus skatīt
nl	Voor vertalingen zie
pl	Aby znaleźć tłumaczenia, sprawdź
pt	Consulte as traduções disponíveis em
ro	Pentru traduceri, consultați
se	För översättningar besök
sk	Preklady sú dostupné na stránke
sl	Za prevode si oglejte
zh	翻译见

www.struers.com/Library