Struers
Ensuring Certainty

Doc. no.: 16857025-09_A_en
Date of release: 2026.06.24
Original Instructions

# SECOTOM-60

Instruction Manual

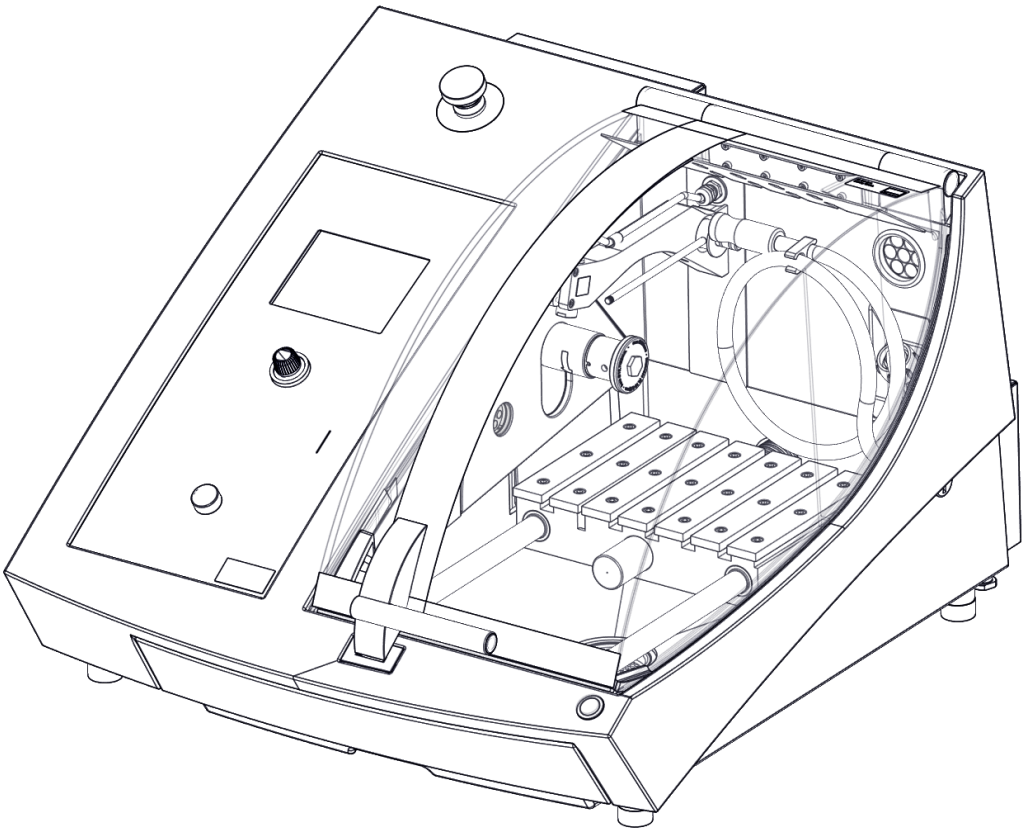

CE

**Copyright**

The contents of this manual are the property of Struers ApS. Reproduction of any part of this manual without the written permission of Struers ApS is not allowed.

All rights reserved. © Struers ApS.

# Table of Contents


**1 About this manual** ..... **6**
1.1 Struers knowledge ..... 6
1.2 Accessories and consumables ..... 6
**2 Safety** ..... **7**
2.1 Intended use ..... 7
2.2 Safety precautions ..... 7
2.3 Safety messages ..... 8
2.4 Safety messages in this manual ..... 9
**3 Get started** ..... **11**
3.1 Device description ..... 11
3.2 Overview ..... 12
3.3 Emergency stop ..... 14
3.4 Safety lock ..... 15
**4 Transport and storage** ..... **15**
4.1 Transport ..... 16
4.2 Long-term storage or shipping ..... 17
**5 Installation** ..... **18**
5.1 Unpack the machine ..... 18
5.2 Check the packing list ..... 18
5.3 Lift the machine ..... 19
5.4 Location ..... 20
5.5 Power supply ..... 21
5.5.1 Single-phase supply ..... 22
5.5.2 2-phase supply ..... 22
5.5.3 Connection to the machine ..... 22
5.5.4 Electrical connections in the cutting chamber ..... 22
5.6 Recirculation unit ..... 23
5.6.1 Water sensitive materials ..... 25
5.6.2 Optimize cooling ..... 25
5.7 Mount the cut-off wheel ..... 25
5.8 Exhaust system (optional) ..... 27
5.9 Noise ..... 28
5.10 Vibration ..... 29

**6 Prepare for operation** ..... **29**
6.1 The hold-to-run button ..... 29
6.2 Automatic height adjustment of the cut-off wheel ..... 30
6.3 Cutting table ..... 30
6.3.1 Position the cutting table ..... 31
6.4 Line laser ..... 31
6.5 Clamping tools ..... 32
6.6 Stands for specimen holders ..... 32
6.7 Debris collection ..... 33
**7 Basic operation** ..... **34**
7.1 Control panel functions ..... 34
7.2 The display ..... 35
7.3 Change the settings ..... 36
7.4 Main menu ..... 37
7.5 Start-up - the first time ..... 37
7.6 Cutting methods ..... 39
7.6.1 Settings ..... 39
7.6.2 Return position ..... 40
7.6.3 Cutting mode ..... 41
7.6.4 OptiFeed ..... 42
7.7 Automatic X-table (optional) ..... 42
7.7.1 Calculating the total specimen width ..... 43
7.8 Manual X-stand (optional) ..... 44
7.9 Rotary stand (optional) ..... 44
7.10 Start the cutting process ..... 45
7.11 Stop the cutting process ..... 46
7.12 Flushing hose ..... 47
**8 The Maintenance menu** ..... **48**
8.1 The Service menu ..... 48
**9 Configuration menu** ..... **49**
9.1 Creating a user defined cut-off wheel ..... 50
**10 Maintenance and service** ..... **52**
10.1 General cleaning ..... 52
10.2 Clamping devices ..... 53
10.3 Cutting tables ..... 53
10.4 Cut-off wheels ..... 53
10.5 Change the tubes ..... 55
10.6 Daily ..... 57
10.7 Weekly ..... 58

10.7.1 Clean the cutting chamber ..... 59
10.7.2 Check the coolant tank ..... 59
10.7.3 Tube for water-free coolant ..... 60
10.8 Monthly ..... 60
10.8.1 Clean the coolant tank ..... 60
10.9 Annually ..... 62
10.9.1 The guard ..... 62
10.9.2 Test the safety devices ..... 62
10.9.3 Emergency stop ..... 63
10.9.4 The guard lock ..... 63
10.9.5 The hold-to-run button ..... 64
10.10 Spare parts ..... 64
10.11 Service and repair ..... 65
10.12 Disposal ..... 66
**11 Troubleshooting ..... 67**
11.1 Machine problems ..... 67
11.2 Cutting problems ..... 68
11.3 Error messages ..... 71
**12 Technical data ..... 75**
12.1 Technical data ..... 75
12.2 Safety Circuit Categories / Performance Level ..... 78
12.3 Technical data - equipment units ..... 78
12.4 Safety Related Parts of the Control System (SRP/CS) ..... 79
12.5 Diagrams ..... 80
12.6 Legal and regulatory information ..... 83
**13 Manufacturer ..... 83**
**Declaration of Conformity ..... 85**

# 1 About this manual

**CAUTION**
Struers equipment must only be used in connection with and as described in the Instruction Manual supplied with the equipment.

**Note**
Read the Instruction Manual carefully before use, and save it for future reference.

**Note**
If you want to view specific information in detail, see the digital version of this manual.

## 1.1 Struers knowledge

Materialographic cutting is where most micro-structure analysis begins.

A good understanding of the cutting process can help in selecting suitable clamping and cutting methods and thereby ensure the high-quality cut.

Minimizing cutting artifacts will help the remaining materialographic process and act as a good base for efficient and high-quality preparation.

**Hint**
For further information, see the section on Cutting on the Struers website.

## 1.2 Accessories and consumables

### Accessories

For information about the available range, see the Secotom-60 brochure on our website at www.struers.com.

### Consumables

The machine is designed to be used only with Struers consumables specifically designed for this purpose and this type of machine.

Other products may contain aggressive solvents, which dissolve e.g. rubber seals. The warranty may not cover damaged machine parts (e.g. seals and tubes), where the damage can be directly related to the use of consumables not supplied by Struers.

For information about the available range, visit our website at www.struers.com.

# 2 Safety

## 2.1 Intended use

The machine is for professional, automatic materialographic cutting of materials for further materialographic inspection.

The machine must be operated only by skilled/trained personnel.

The machine is designed to be used only with Struers consumables specifically designed for this purpose and this type of machine.

The machine is for use in a professional working environment (e.g. a materialographic laboratory).

| | |
|---|---|
| **Do not use the machine for the following** | Cutting of materials other than solid materials suitable for materialographic studies.<br>The machine must not be used for any type of explosive and/or flammable material, or materials which are not stable during machining, heating or pressure.<br>The machine must not be used with cut-off wheels which are not compatible with the machine requirements (e.g. toothed cut-off wheels). |
| **Model** | Secotom-60 |

## 2.2 Safety precautions

**Read carefully before use**

1. Ignoring this information and mishandling of the equipment can lead to severe bodily injuries and material damage.
2. The machine must be installed in compliance with local safety regulations. All functions on the machine and any connected equipment must be in working order.
3. The operator must read the safety precautions and Instruction Manual, as well as relevant sections of the manuals for any connected equipment and accessories.
   The operator must read the Instruction Manual and, where applicable, the Safety Data Sheets for the applied consumables.
4. This machine must be operated and maintained only by skilled/trained personnel.
5. Always use intact cut-off wheels that have been approved for a minimum of: 5000 rpm
6. The machine must be placed on a safe and stable table with an adequate working height.
7. Make sure that the actual electrical power supply voltage corresponds to the voltage stated on the name plate of the machine. The machine must be earthed (grounded).

Always follow local regulations. Always switch off the electrical power supply and remove the plug or power cable before dismantling the machine or installing additional components.

8. Do not switch the machine on and off more than once every three minutes. Damage to the electrical components could occur.
9. Laser radiation. Do not stare into the beam or expose users of telescopic optics. Class 1M laser product.
10. Consumables: only use consumables specifically developed for use with this type of materialographic machine.
11. Observe the current safety regulations regarding handling, mixing, filling, emptying, and disposing of coolant with additives. Avoid skin contact.
12. The workpiece must be securely fixed in a clamping device or similar.
13. Pay attention to the protruding safety catch when the guard is raised.
14. Wear suitable gloves to protect fingers from abrasives and hot/sharp specimens.
15. Wear safety goggles when using the flushing hose. Only use the flushing hose for cleaning inside the cutting chamber.
16. If you observe malfunctions or hear unusual noises, switch off the machine and call technical service.
17. The machine must be disconnected from the electrical power supply before any service. Wait 5 minutes until residual potential on the capacitors is discharged.
18. In case of fire, alert bystanders and the fire brigade. Use a powder fire extinguisher. Do not use water.
19. Struers equipment must only be used in connection with and as described in the Instruction Manual supplied with the equipment.
20. The machine is designed to be used only with Struers consumables specifically designed for this purpose and this type of machine.
21. If the equipment is subjected to misuse, incorrect installation, alteration, neglect, accident or incorrect repair, Struers will accept no responsibility for damage to the user or the equipment.
22. Dismantling of any part of the equipment, during service or repair, must always be performed by a qualified technician (electromechanical, electronic, mechanical, pneumatic, etc.).

## 2.3 Safety messages

Struers uses the following signs to indicate potential hazards.

**ELECTRICAL HAZARD**
This sign indicates an electrical hazard which, if not avoided, will result in death, or serious injury.

**WARNING**
This sign indicates a hazard with a medium level of risk which, if not avoided, could result in death, or serious injury.

**CRUSHING HAZARD**
This sign indicates a crushing hazard which, if not avoided, could result in minor, moderate, or serious injury.

**CAUTION**
This sign indicates a hazard with a low level of risk which, if not avoided, could result in minor, or moderate injury.

**Emergency stop**
This sign indicates that information regarding the emergency stop is available.

### General messages

**Note**
This sign indicates that there is a risk of damage to property, or a need to proceed with special care.

**Hint**
This sign indicates that additional information and hints are available.

## 2.4 Safety messages in this manual

**ELECTRICAL HAZARD**
Switch off the electrical power supply before installing electrical equipment.
The machine must be earthed (grounded).
Make sure that the actual electrical power supply voltage corresponds to the voltage stated on the name plate of the machine.
Incorrect voltage can damage the electrical circuit.

**WARNING**
Struers equipment must only be used in connection with and as described in the Instruction Manual supplied with the equipment.

**WARNING**
Replace the guard immediately if it has been weakened by collision with projectile objects or if there are visible signs of deterioration or damage.

**WARNING**
Do not use the machine with defective safety devices.
Contact Struers Service.

**WARNING**
Safety critical components must be replaced after a maximum lifetime of 20 years.
Contact Struers Service.

**WARNING**
To ensure its intended safety, the guard must be replaced every 2 years. A label on the guard indicates when it is due to be replaced.

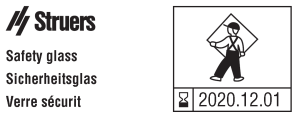


**WARNING**
In case of fire, alert bystanders, the fire brigade and cut power. Use a powder fire extinguisher. Do not use water.

**WARNING**
Laser radiation. Do not stare into the beam or expose users of telescopic optics.
Class 1M laser product.

**CRUSHING HAZARD**
Take care of your fingers when handling the machine.
Wear safety shoes when handling heavy machinery.

**CAUTION**
Mind the protruding safety catch when the safety guard is raised.

**CAUTION**
Do not start flushing until the flushing hose is pointing into the cutting chamber.

**CAUTION**
Read the Safety Data Sheet for the additive for coolant before use.

**CAUTION**
Avoid skin contact with the coolant additive.
Always wear protective gloves and safety goggles.

**CAUTION**
Prolonged exposure to loud noises may cause permanent damage to a person's hearing.
Use hearing protection if the exposure to noise exceeds the levels set by local regulations.

**CAUTION**
Risk of hand to arm vibration during manual preparation.
Prolonged exposure to vibration may cause discomfort, joint damage or even neurological damage.

**CAUTION**
Wear suitable gloves to protect fingers from abrasives and hot/sharp specimens.

**CAUTION**
Wear suitable gloves to protect fingers from abrasives and warm/sharp specimens. Coolant can contain swarf (cutting and grinding debris or other particles.

# 3 Get started

## 3.1 Device description

Secotom-60 is an automatic cut-off machine for cutting a majority of solid and stable (non-explosive) materials. It has a motorized Y-table, and a recirculation cooling tank. The height of the cut-off wheel is adjusted with the joystick.

The operator starts the process by selecting and mounting the cut-off wheel. The operator enters the cutting parameters (e.g. cut-off wheel rotation speed and cutting length) in the software of the machine.

The workpiece is secured by using clamping tools – either directly to the cutting table or to a stand which is clamped on the cutting table.

The guard locks when the operator starts the machine. The guard remains locked until all movement is stopped and the cutting table is in the selected stop position.

The specimens may be hot after the process and it is therefore recommended to wear gloves when handling the processed specimens.

The recirculated cooling fluid contains additives and debris from the cutting process. It is recommended to wear goggles and gloves when handling the cooling fluid.

It is recommended to connect the machine to an external exhaust system to remove fumes from the cutting process.

In case of power-loss during the process, the guard remains locked. Use the special key to release the lock and open the guard.

If the emergency stop is activated, the power to all moving parts is cut. The guard can be opened when the emergency stop is released.

## 3.2 Overview

### Front view

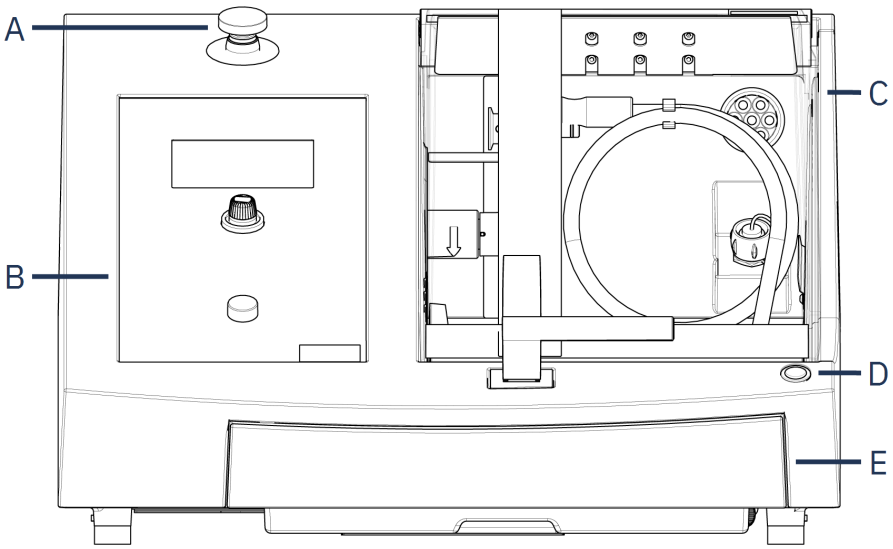


| | | | |
|---|---|---|---|
| **A** | Emergency stop | **C** | Safety guard |
| **B** | Front panel | **D** | Hold-to-run button |
| | | **E** | Coolant tank |

**Emergency stop**
The emergency stop button is located on the front of the machine.

- Push the red button to activate.
- Turn the red button clockwise to release.

## Rear view

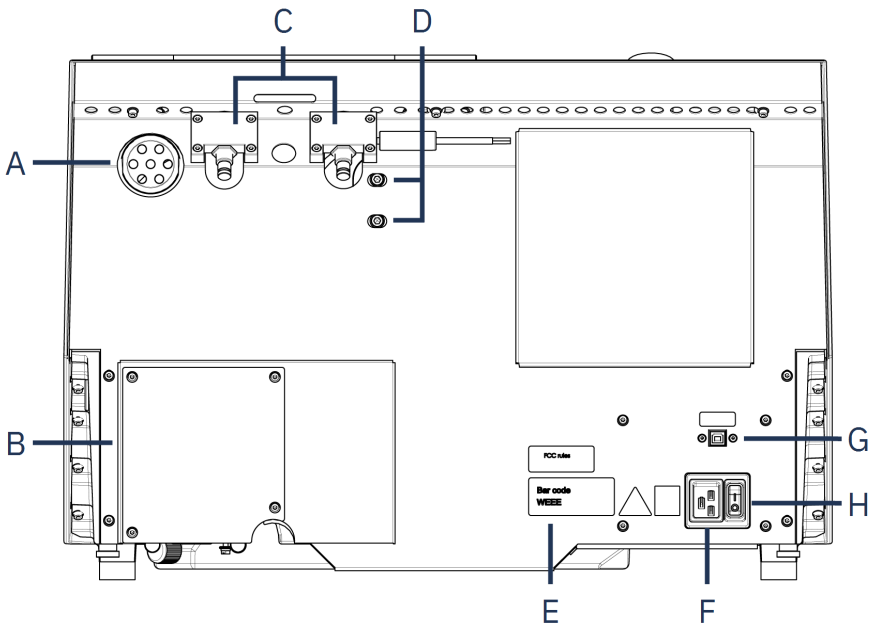


| | | | |
|---|---|---|---|
| **A** | Exhaust flange | **E** | Name plate |
| **B** | Pump cover | **F** | Power socket |
| **C** | Hinges | **G** | Service socket |
| **D** | Holes for adjusting the laser | **H** | Main switch |

**Cutting chamber**

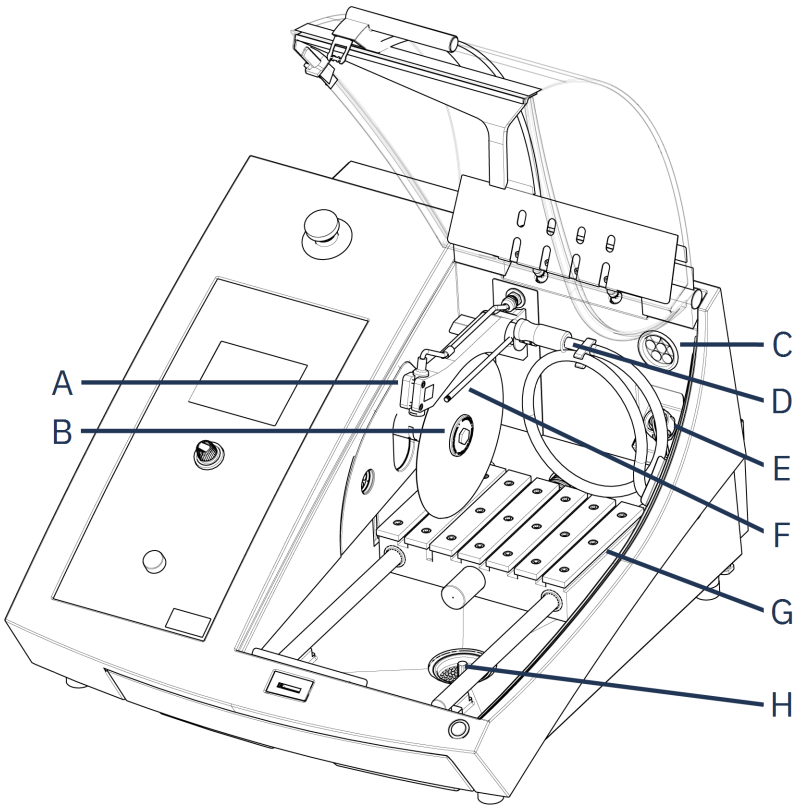


| | | | |
|---|---|---|---|
| **A** | Line laser | **E** | Power socket |
| **B** | Spindle - cut-off wheel | **F** | Coolant nozzles |
| **C** | Exhaust | **G** | Cutting table |
| **D** | Flushing hose | **H** | Drain |

## 3.3 Emergency stop

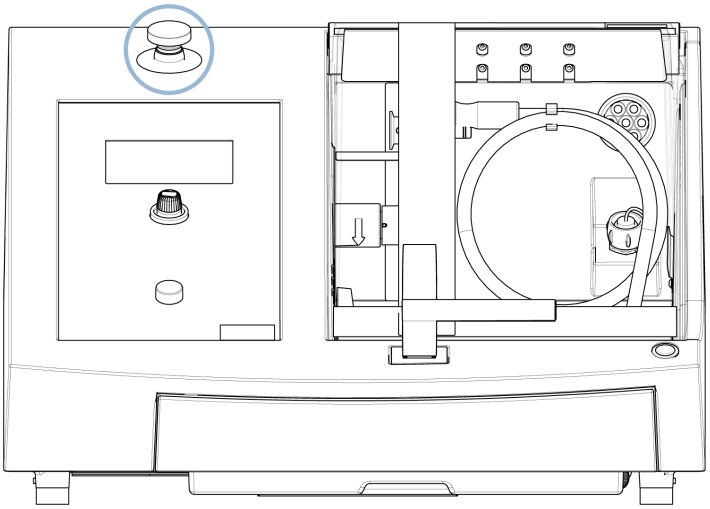

**Emergency stop**
Do not use the emergency stop for operational stop of the machine during normal operation.
Before you release the emergency stop, investigate the reason for activating the emergency stop and take any necessary corrective action.

- To activate the emergency stop, press the red emergency stop button.
- To release the emergency stop, turn the red emergency stop button clockwise.

## 3.4 Safety lock

You can only open the guard on the machine when the machine is connected to the power supply and the main power switch is on.

### To open the guard if the power is not connected

Use the triangle key supplied to deactivate the safety lock.

1. Remove the coolant tank.

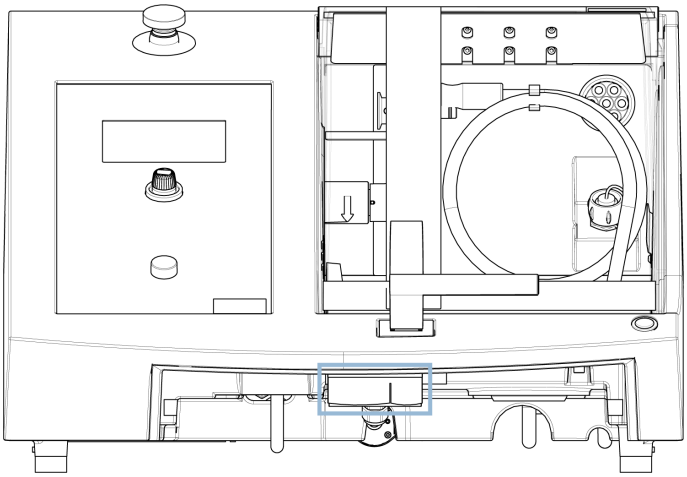

2. Insert the key.
3. Turn the key 180°. Do not use force.
4. Re-activate the safety lock release before you start operating the machine.

# 4 Transport and storage

If, at any time after the installation, you have to move the unit or place it in storage, there is a number of guidelines we recommend that you follow.

- Package the unit securely before transportation. Insufficient packaging could cause damage to the unit and will void the warranty. Contact Struers Service.
- We recommend that you use the original packaging and fittings.

## 4.1 Transport

**CRUSHING HAZARD**
Take care of your fingers when handling the machine.
Wear safety shoes when handling heavy machinery.

**Note**
We recommend that you keep all original packaging and fittings for future use.

### Prepare for transport

1. Empty the coolant tank.
2. Disconnect the unit from the electrical power supply.
3. Disconnect the unit from the exhaust system.
4. Remove any accessories.
5. Clean and dry the machine.

### Move the machine

**Note**
Always lift the machine from beneath.
Do not lift the machine by holding it by the gray cabinet.

- Use a crane and two lifting straps to lift the machine. The lifting straps must be approved for lifting at least twice the weight of the load.
- Use straps of approx. 3 - 3.5 m (10 - 11.5 ft) in length so that they do not place stress on the guard.
- A lifting bar is recommended so that the two straps are kept apart below the lifting point.
- Use screwdrivers/bits: TX30, PH2 and H4

### Procedure

1. Remove the coolant tank.

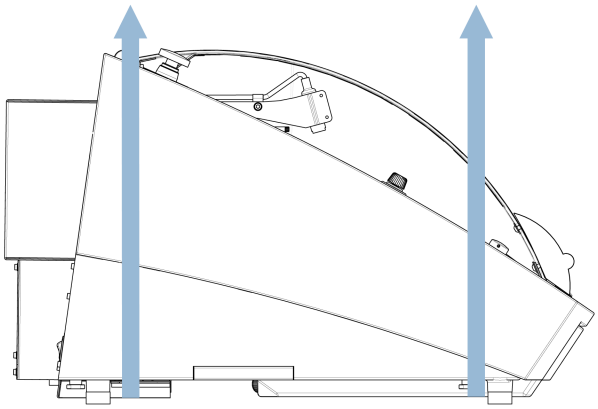

2. Position the straps under the machine, so that they are on the inside of the feet.
3. Make sure that the tension on the lifting straps is distributed evenly.
4. Lift the front of the machine and carefully move it onto the table.
5. The machine must rest securely with all 4 feet on the table.
6. Put the coolant tank back in place.

### At the new location

- At the new location, make sure that the facilities required are in place.
- Lift the machine onto a stable surface.
- Put the coolant tank back in place.
- Install the unit.

## 4.2 Long-term storage or shipping

**Note**
We recommend that you keep all original packaging and fittings for future use.
Clean the machine and all accessories thoroughly.

If the machine is bound for long-time storage or shipping, follow these steps:

1. Clean and dry the machine.
2. Place the machine on the blocks on the original pallet.
3. Use the original transport brackets to secure the machine.
4. Wrap the machine in plastic wrap.
5. Build a crate around the machine.
6. Wrap and place accessories and other loose items in the crate.

7. Place a bag of desiccant (silica gel) in the box.

**At the new location**

- At the new location, make sure that the facilities required are in place.

# 5 Installation

## 5.1 Unpack the machine

**CRUSHING HAZARD**
Take care of your fingers when handling the machine.
Wear safety shoes when handling heavy machinery.

**Note**
We recommend that you keep all original packaging and fittings for future use.

**Procedure**

1. Remove the screws around the base of the packing crate and lift off the upper part of the crate.
2. Use a 4 mm Allen key to remove the screws in the metal brackets that secure the machine to the pallet.
3. Remove the coolant tank.
4. Remove any loose parts and accessories.
5. Lift the machine. See Lift the machine ► 19.

## 5.2 Check the packing list

Optional accessories may be included in the packing box.

The packing box contains the following items:

| Pcs. | Description |
|---|---|
| 1 | Secotom-60 |
| 2 | Electrical power supply cables |
| 1 | Triangle key for safety lock release |
| 1 | Support pin |
| 1 | Socket spanner. 17 mm (0.7") |
| 1 | Hose for connection to exhaust. Diameter: 51 mm (2"). Length: 1.5 m (59") |

| Pcs. | Description |
|---|---|
| 1 | Hose clamp. Diameter: 40 - 60 mm (1.6" - 2.4") |
| 1 | Instruction Manual |

## 5.3 Lift the machine

**CRUSHING HAZARD**
Take care of your fingers when handling the machine.
Wear safety shoes when handling heavy machinery.

**Note**
We recommend that you keep all original packaging and fittings for future use.

**Note**
Do not lift the machine by the light gray top part.
Always lift the machine from beneath.

| Weight | |
|---|---|
| **Secotom-60** | 77 kg (170 lbs) |

- Use a crane and two lifting straps to lift the machine. The lifting straps must be approved for lifting at least twice the weight of the load.
- Use straps of approx. 3 - 3.5 m (10 - 11.5 ft) in length so that they do not place stress on the guard.
- A lifting bar is recommended so that the two straps are kept apart below the lifting point.
- Use screwdrivers/bits: TX30, PH2 and H4

### Procedure

1. Remove the coolant tank.

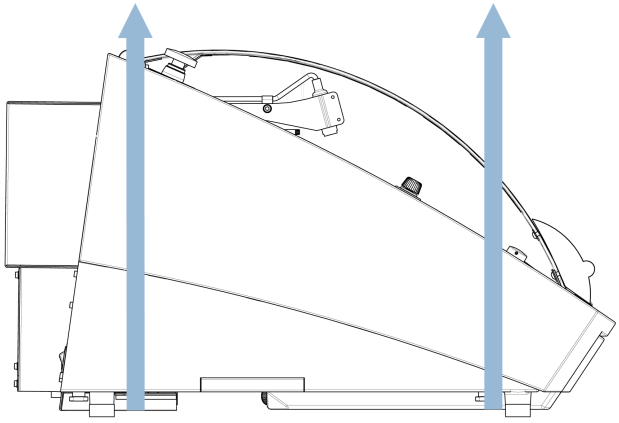

2. Position the straps under the machine, so that they are on the inside of the feet.
3. Make sure that the tension on the lifting straps is distributed evenly.
4. Lift the front of the machine and carefully move it onto the table.
5. The machine must rest securely with all 4 feet on the table.

## 5.4 Location

**CRUSHING HAZARD**
Take care of your fingers when handling the machine.
Wear safety shoes when handling heavy machinery.

- The machine must be placed on a safe and stable table with an adequate working height. The table must be able to carry at least the weight of the machine and the accessories.

| Recommended workbench dimensions | |
|---|---|
| **X** | 92 cm (36.2") |
| **Y** | 90 cm (35.4") |
| **Z** | 80 cm (31.5") |

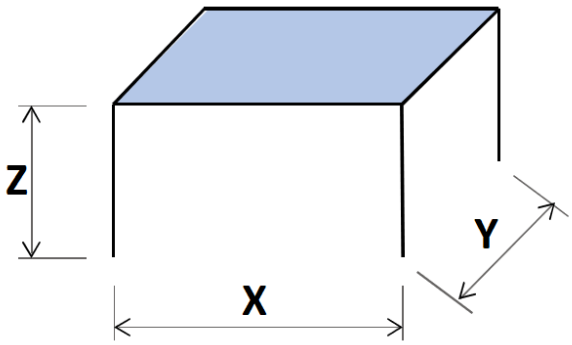


- The machine must be placed close to the electrical power supply.

- The machine must be placed in a well-ventilated room or connected to an exhaust system.
- The machine must rest securely with all 4 feet on the table.
- The machine must be completely level: tolerance ± 1 mm.
- Make sure that there is sufficient space around the machine for service access.
- Make sure that there is enough room in front of the machine: 100 cm (40").
- Make sure that there is enough room behind the machine to fully open the cover.
- Make sure that there is enough room behind the machine for the exhaust hose: approx. 15 cm (5.9").

### Illumination

- Make sure that the work station has adequate lighting. Avoid direct glare (dazzling light sources within the operator's line of vision) and reflected glare (reflections of light sources).

  A minimum of 300 Lumen is recommended to illuminate the controls and other work areas.

| Ambient conditions | | |
|---|---|---|
| Operating environment | Surrounding temperature | Operation: 5 - 40°C (40 - 105°F) |
| | | Storage: 0 - 60°C (32 - 140°F) |
| | Humidity | Operation: 35 - 85% RH non-condensing |
| | | Storage: 0 - 90% RH non-condensing |

## 5.5 Power supply

**ELECTRICAL HAZARD**
Switch off the electrical power supply before installing electrical equipment.
The machine must be earthed (grounded).
Make sure that the actual electrical power supply voltage corresponds to the voltage stated on the name plate of the machine.
Incorrect voltage can damage the electrical circuit.

**Note**
The equipment is shipped with 2 types of electrical power cables. If the plug supplied on these cables is not approved in your country, the plug must be replaced with an approved plug.

| Power supply | |
|---|---|
| Voltage/frequency | 200 - 240 V (50 - 60 Hz) |
| Power inlet | 1-phase (N+L1+PE) or 2-phase (L1+L2+PE)<br>The electrical installation must comply with Installation Category II |
| Power, nominal load | 1.1 kW |
| Power, max | 1.5 kW |
| Power, idle | 13 W |
| Current, max. | 14.8 A |

### 5.5.1 Single-phase supply

The 2-pin plug (European Schuko) is for use on single-phase electrical power connections.

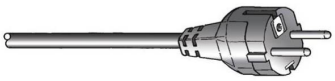

The leads must be connected as follows:

| | |
|---|---|
| Yellow/Green | Earth (ground) |
| Brown | Line (live) |
| Blue | Neutral |

### 5.5.2 2-phase supply

The 3-pin plug (North American NEMA) is for use on 2-phase electrical power connections.

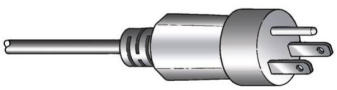

The leads must be connected as follows:

| | |
|---|---|
| Green | Earth (ground) |
| Black | Line (live) |
| White | Line (live) |

### 5.5.3 Connection to the machine

- Connect the electrical power cable to the machine (C19 IEC 60320 connector).
- Connect the cable to the electrical power supply.

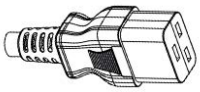

### 5.5.4 Electrical connections in the cutting chamber

The following units require electrical connections:

- The automatic X-table

- The manual X-stand
- The rotary stand

These units are supplied through the electrical connection socket inside the cutting chamber.

**Note**
You can change the electrical accessories while the machine is switched on.

**Note**
The plugs on the accessories provide specific pin connections.
If there is a problem with a connection, do not try to change the connections in the clamping tool plugs or connection socket.
Contact Struers Service.

### Procedure

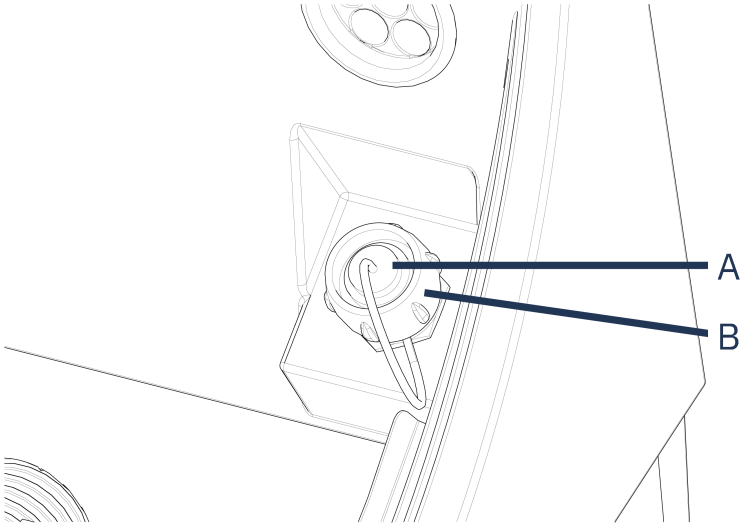


| | | | |
|---|---|---|---|
| **A** | Socket | **B** | Securing ring |

1. Remove the cap on the electrical connection socket in the cutting chamber.
2. Connect the accessory to the electrical connection socket.
3. A message on the screen confirms that the accessory is connected.
4. Gently tighten the securing ring.
5. When a socket is not in use, mount the socket cap in the socket.

## 5.6 Recirculation unit

**CAUTION**
Read the Safety Data Sheet for the coolant additive before use.

**CAUTION**
Avoid skin contact with the coolant additive.
Always wear protective gloves and safety goggles.

The machine has a built-in recirculation coolant system. The coolant coming from the nozzles passes over the cut-off wheel and is collected in the drain in the cutting chamber. The coolant then returns to the tank located under the cutting chamber.

### Fill the coolant tank

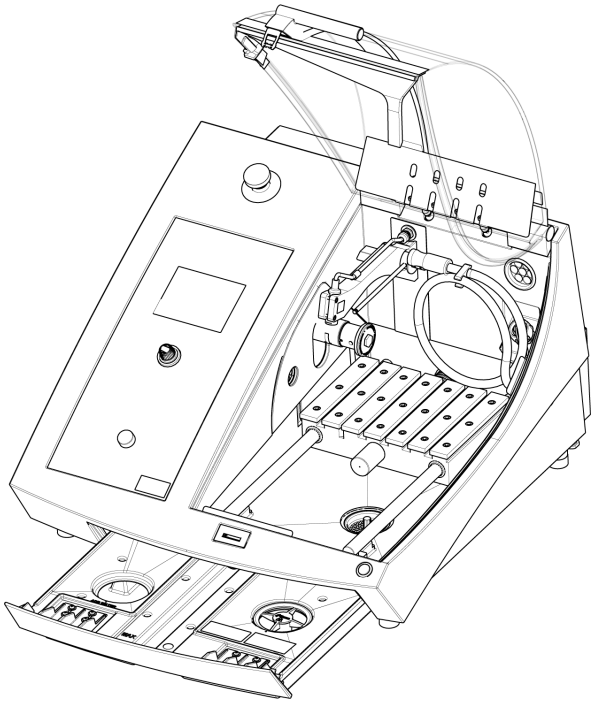

1. Make sure that the coolant tank is in position under the chamber.
2. Fill the tank with water and coolant additive through the hole in the base of the chamber.

**Note**
Make sure that you do not to overfill the tank.

**Note**
Make sure to use the coolant additive at the right concentration. Follow the instructions for the coolant additive.
Use a refractometer to check the concentration of coolant additive.

### 5.6.1 Water sensitive materials

**Note**
The standard tube only lasts for a few hours, if it is used for water-free coolant.

If you use water-free coolant, replace the standard tube in the coolant pump with a tube for water-free coolant.

To replace the tube in the coolant pump, see Change the tubes ► 55.

### 5.6.2 Optimize cooling

**Note**
Only use consumables specifically developed for use with this type of materialographic machine.
Do not use oil, petrol, or turpentine-based additives, as they can affect the coolant tubes.

Sufficient cooling is essential for ensuring the best cutting quality, and to avoid burning of the workpiece and damage to the cut-off wheel.

- Always use additive to protect the cutting machine from corrosion and to improve cutting and cooling qualities.
- Make sure that there is sufficient fluid in the coolant tank for optimal cooling.
- Make sure that the concentration of additive in the coolant is as stated on the additive container.
- Add coolant additive whenever you refill the coolant tank with water. See Recirculation unit ► 23.
- We recommend that you change the coolant at least once a month to prevent the growth of microorganisms.

## 5.7 Mount the cut-off wheel

#### Procedure

**CAUTION**
Mind the protruding safety catch when the safety guard is raised.

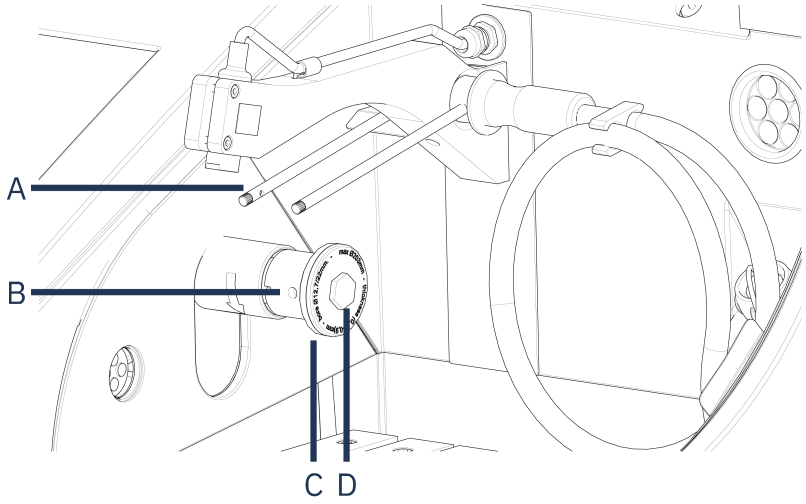


| | | | |
|---|---|---|---|
| **A** | Coolant nozzles | **C** | Outer flange |
| **B** | Support pin hole | **D** | Flange screw |

1. Lift the guard to its open position (the position where it stays up and open when you release it).
2. Lift the coolant nozzles to gain access to the cut-off wheel assembly.

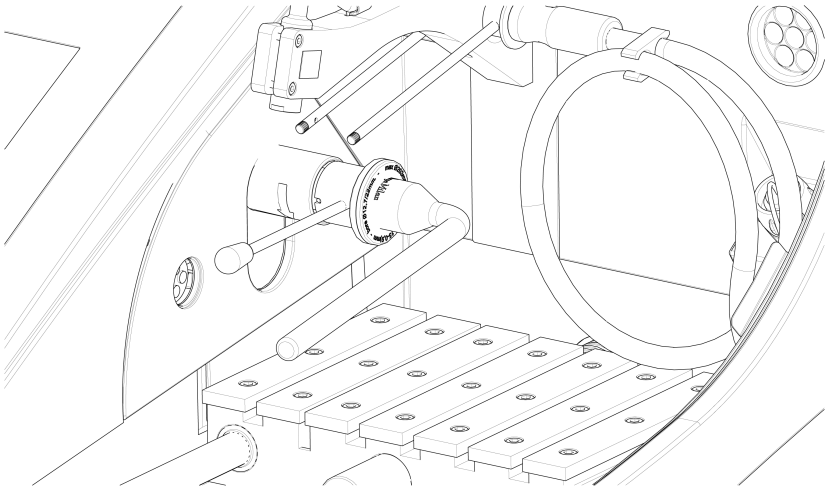

3. Insert the support pin into the hole in the cut-off wheel spindle.
4. Use the 17 mm socket spanner to loosen the flange screw.
5. Remove the outer flange.

**Note**
The tolerance between the spindle and inner flange is very small which means that the two surfaces must be absolutely clean.
Never try to force the cut-off wheel on as this may damage the spindle or the cut-off wheel. If there are any small burrs, remove them with grinding paper, grit size 1200.

**Note**
When you mount cut-off wheels with a 12.7 mm center hole, make sure that you remove the 22 mm arbor insert. If you do not, the cut-off wheel will be pressed out of shape.

6. Before mounting the cut-off wheel, test the cut-off wheel for damages. See Cut-off wheels ► 53.

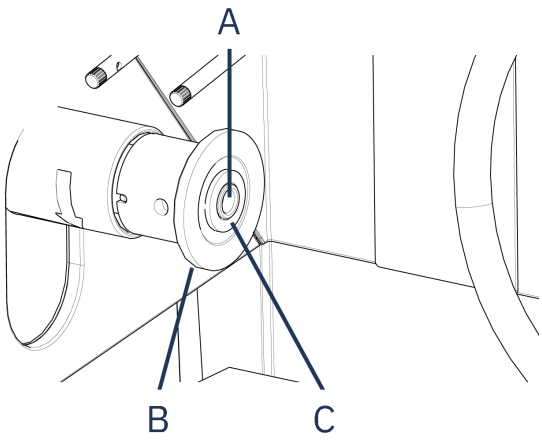


| | | | |
|---|---|---|---|
| **A** | 12.7 mm axle | **C** | Insert for wheels with 22 mm arbor hole |
| **B** | Inner flange | | |

7. Mount the cut-off wheel. If needed, use the 22 mm insert.
8. Remount the outer flange with the machined surface facing towards the inner flange.
9. Insert the support pin into the hole in the inner flange.
10. Use the 17 mm socket spanner to gently fasten the flange screw. Tighten the screw with a force of maximum 5 N·m (4 lbf·ft).
11. Lower the coolant nozzles to their operating positions.

## 5.8 Exhaust system (optional)

We recommend that you connect the machine to an exhaust system because workpieces can emit harmful gases when they are being cut.

The machine is prepared for connection to an exhaust system through a 50 mm ventilation flange at the rear of the cabinet.

Minimum capacity: 30 m³/h (1,060 ft³/h) at 0 mm (0") water gauge.

### Exhaust connection

The machine is delivered with an exhaust hose.

- Length: 1.5 m (4.9').
- Diameter: 50 mm (2").

### Procedure

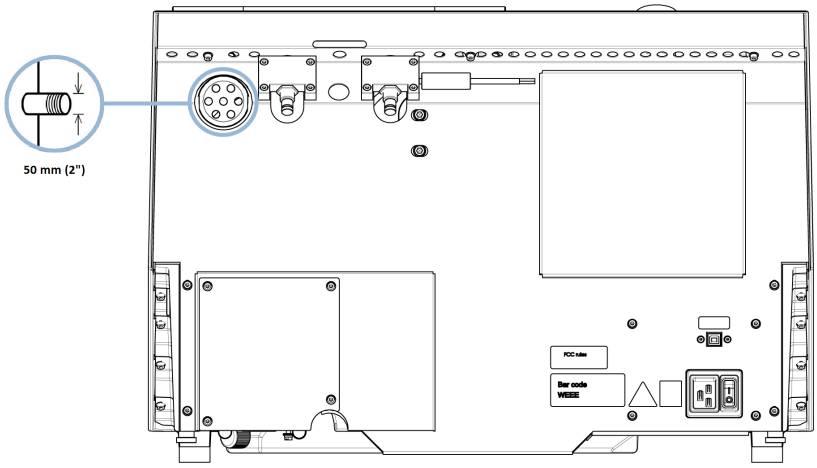


- Mount the exhaust hose from the ventilation flange on the machine to the exhaust system.

## 5.9 Noise

**CAUTION**
Prolonged exposure to loud noises may cause permanent damage to a person's hearing.
Use hearing protection if the exposure to noise exceeds the levels set by local regulations.

For information on the sound pressure level value, see this section: Technical data ► 75.

### Handling noise during operation

Different materials have different noise characteristics.

- To lower the noise, decrease the rotational speed and/or the force with which the workpiece is pressed against the cut-off wheel.

  The processing time may increase.

## 5.10 Vibration

**CAUTION**
Risk of hand to arm vibration during manual preparation.
Prolonged exposure to vibration may cause discomfort, joint damage or even neurological damage.

For information on the total vibration exposure to hand and arm, see this section: Technical data ► 75.

#### How to handle vibration during operation

Manual preparation may cause vibrations in hand and arm. To lower the vibration, decrease the pressure or use a vibration-reducing glove.

# 6 Prepare for operation

## 6.1 The hold-to-run button

When the guard is open, you can carry out the following adjustments:

- Position the cutting table. See Position the cutting table ► 31.
- Adjust the height of the cut-off wheel. See Automatic height adjustment of the cut-off wheel ► 30.
- Adjust the automatic X-table (optional). See Automatic height adjustment of the cut-off wheel ► 30.

#### Procedure

**CAUTION**
Mind the protruding safety catch when the safety guard is raised.

1. Lift the guard to its open position (the position where it stays up and open when you release it).

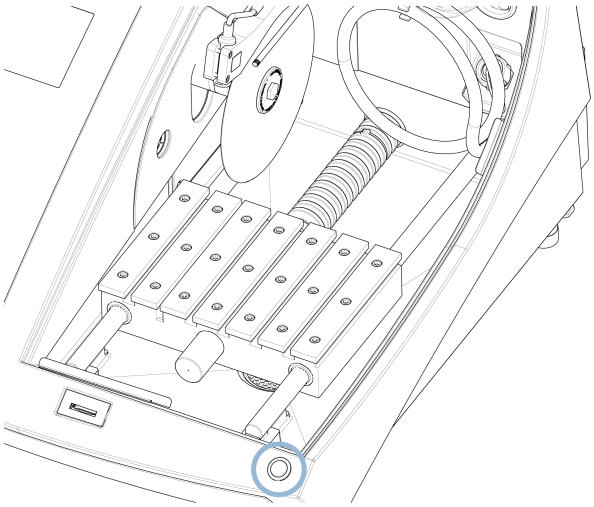

2. Press the hold-to-run button while you operate the joystick.

## 6.2 Automatic height adjustment of the cut-off wheel

You can adjust the distance between the spindle of the cut-off wheel and the cutting table in order to suit the cut-off wheel and to compensate for wear caused by the cutting process.

1. Use the joystick on the control panel to raise and lower the cut-off wheel. See: Control panel functions ► 34.

## 6.3 Cutting table

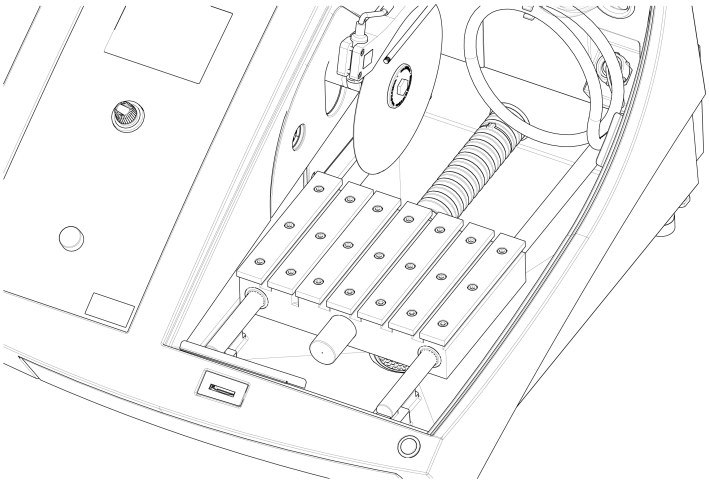

The machine is fitted with a moving cutting table.

- Position 1 mm thick cut-off wheels in the middle of the Y-table cutting groove.
- Position thicker cut-off wheels slightly to the right.
- Position thinner cut-off wheels slightly to the left.

To control the movement of the table, use the joystick on the control panel and the software. See Control panel functions ► 34.

The table has 8 mm T-slots, which are used to secure clamping tools.

Clamping tools are available as accessories.

### 6.3.1 Position the cutting table

Position the cutting table manually before you start the cutting process:

- Use the joystick to position the cutting table.

**Note**
To position the table while the guard is open, you must press the hold-to-run button while you move the joystick.

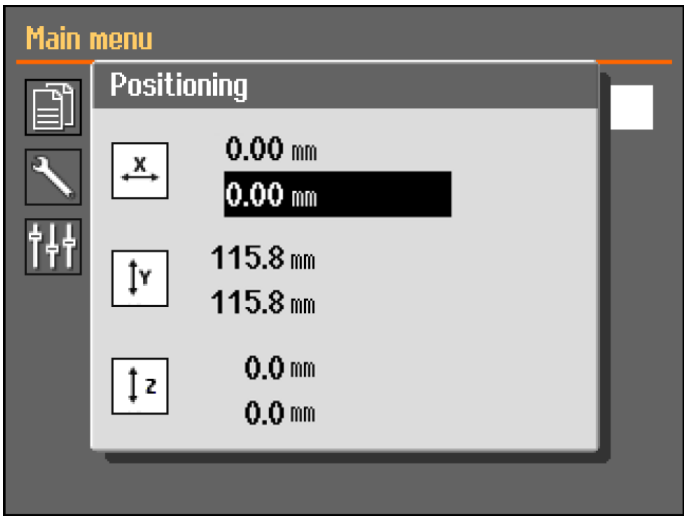


The **Positioning** menu is displayed when you press Up or Down.

## 6.4 Line laser

**WARNING**
Laser radiation. Do not stare into the beam or expose users of telescopic optics. Class 1M laser product.

The laser beam indicates the position of the cut for precise placement of the workpiece.

- The laser is automatically activated when the machine is powered on.
- The laser is automatically deactivated when the machine is in standby mode.

Due to the variation in the thickness of the cut-off wheels, the laser is aligned with the inner flange and not with the cut-off wheel.

## 6.5 Clamping tools

**CAUTION**
Mind the protruding safety catch when the safety guard is raised.

A range of clamping tools are available. Some can be mounted directly on the cutting table; others must be fixed on a stand using a dovetail holder.

**Note**
When you fit clamping tools, always make sure that they do not block the cut-off wheel. Failure to do so will result in damage to the clamping tools and/or the cut-off wheel.

### Quick-clamping and spring clamp devices

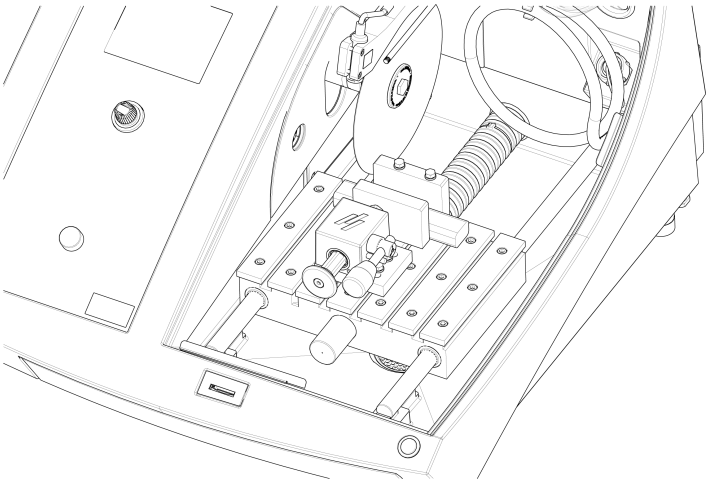

1. Position the back stop and the clamping device as shown.
2. Tighten the nuts to secure the back stop and the clamping device.

## 6.6 Stands for specimen holders

**Hint**
The fixed stand can be mounted on the Automatic X-table.

1. Place the stand on the cutting table by sliding the securing bolts into the T-slot.

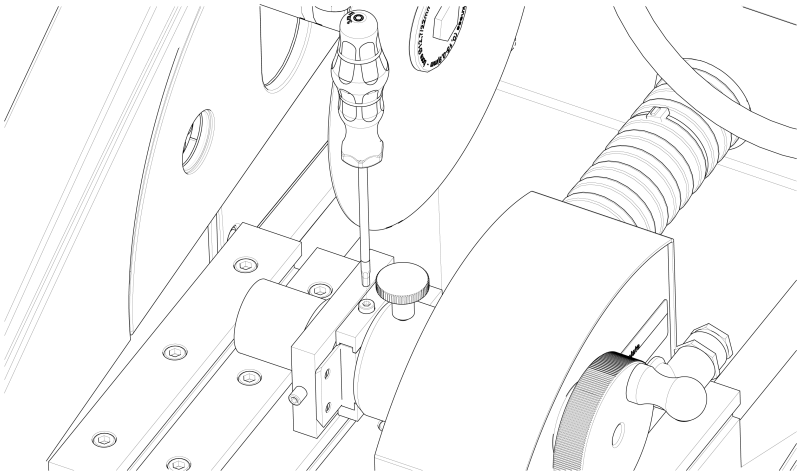

2. Tighten the nuts.

   For stands requiring an electrical supply:

   – Connect the cable. See Electrical connections in the cutting chamber ► 22.

3. Clamp the specimen in the specimen holder.
4. Slide the dovetail of the specimen holder into the stand and secure it.

## 6.7 Debris collection

The machine has two systems to keep debris from contaminating the coolant and blocking the nozzles:

– A basket in the drain prevents larger pieces of debris from entering the tank.
– A magnet in the tank collects magnetic particles.

**Note**
Check the basket and the magnet for cutting debris before you start the cutting process. A blocked drain can result in water overflow and insufficient cooling if the level of coolant in the tank is too low.

# 7 Basic operation

## 7.1 Control panel functions

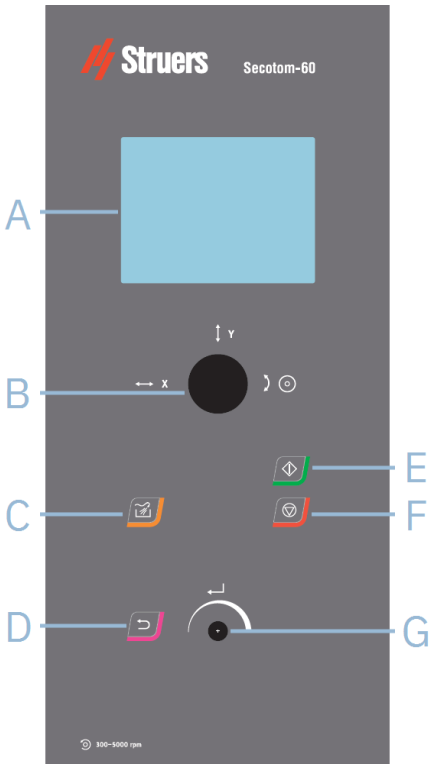


| | | | |
|---|---|---|---|
| **A** | Display | **E** | Start |
| **B** | Joystick | **F** | Stop |
| **C** | Flush | **G** | Turn/push knob |
| **D** | Back | | |

| Joystick functions | |
|---|---|
| ↔ X | Move the joystick left or right to position the automatic X-table. (Optional) |
| ↕ Y | Move the joystick upwards or downwards to position the cutting table. |
| ↻ ⊙ | Turn the joystick clockwise or counterclockwise to position the cut-off wheel. |

| Button | Function |
|---|---|
| | **Flush**<br>• Starts the flushing operation. |
| | **Back**<br>• Press this button to return to the previous screen or to cancel functions/changes. |
| | **Start**<br>• Starts the cutting process. |
| | **Stop**<br>• Stops the cutting process. |
| 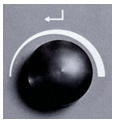 | **Turn/push knob**<br>Use this knob on the control panel to select menu items.<br>• Turn the knob to select a menu, a method group or to change a value.<br>• Press the knob to enter a field or activate the selection.<br>• Turn the knob to increase or decrease the numeric value, or to toggle between two options.<br>– If there are only two options, press the knob to toggle between the two options.<br>– If there are more than two options, a pop-up box is shown. |

## 7.2 The display

**Note**
The screens shown in this manual may differ from the actual screens in the software.

When you switch on the machine, the display shows the configuration and the version of the installed software.

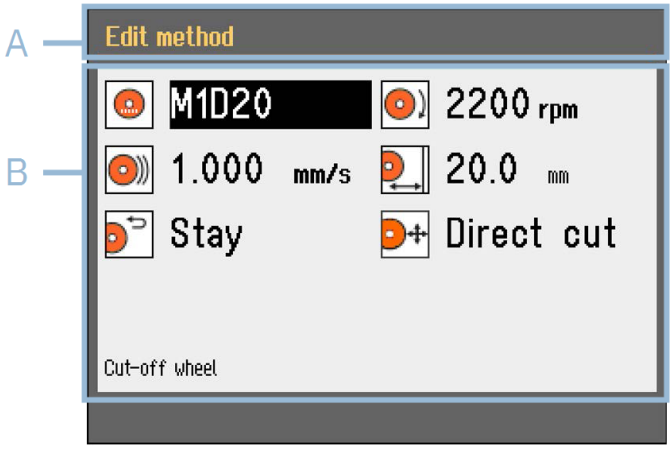


The display is divided into two main areas:

**A Title bar**
The title bar shows the function you have selected.

**B Information fields**
These fields show information about the selected function. In some fields you can select and change the value.

| Acoustic signals | |
|---|---|
| **Short beep** | A short beep when you press a key, indicates that the selection is confirmed.<br>You can enable or disable the beep: select **Configuration**. |
| **Long beep** | A long beep when you press a button, indicates that the key cannot be activated at the moment.<br>You cannot disable this acoustic signal. |

### Standby mode

To increase the lifetime of the display, the backlight is dimmed automatically if the machine has not been used for a while. (10 min)

- Press any key to reactivate the display.

## 7.3 Change the settings

To change a setting, select the field for changing the setting.

1. Turn the knob to go to the field where you wish to change the setting.
2. Press the knob to enter the field.
   - **More than two options:**
     Scrolling list: Turn the knob to scroll up or down in a list of values.

     Pop-up dialog: Turn the knob to scroll up or down the list of options. Press the knob to select the desired option.

- **Two options:**
  Press the knob to toggle between the options.

3. Press the knob to exit the screen.
4. If needed, press Back to cancel functions/changes.

## 7.4 Main menu

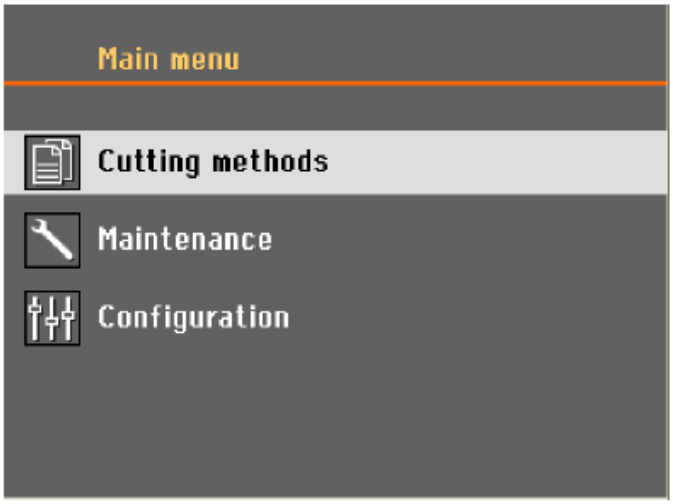


From the **Main menu** you can choose between the following options:

| | |
|---|---|
| | **Cutting methods** |
| | **Maintenance** |
| | **Configuration** |

## 7.5 Start-up - the first time

The first time you switch on the machine, you will be prompted to select the language you wish to use, and set the date and time.

If needed, use the controls on the control panel to change the settings. See Change the settings ► 36.

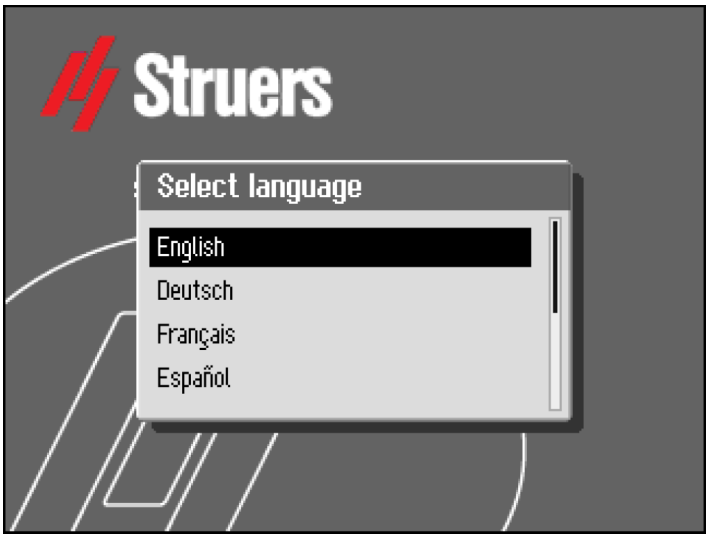


1. **Select language**

   Select the language you wish to use. If needed, you can change the language at a later date. See Configuration menu ► 49.

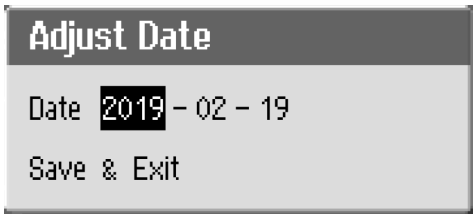


2. **Adjust date**

   You will be prompted to set the time.

3. **Adjust time**

   You will be prompted to set the date.

4. If needed, go to the main menu. See also Main menu ► 37.

### Start-up - daily operation

When you switch on the machine, the screen that was shown when the machine was switched off is shown just after the start-up screen.

# 7.6 Cutting methods

## 7.6.1 Settings

1. From the **Main menu** screen, select **Cutting methods**.

   The selected cut-off wheel and cutting length are highlighted.

2. Select a cutting method.

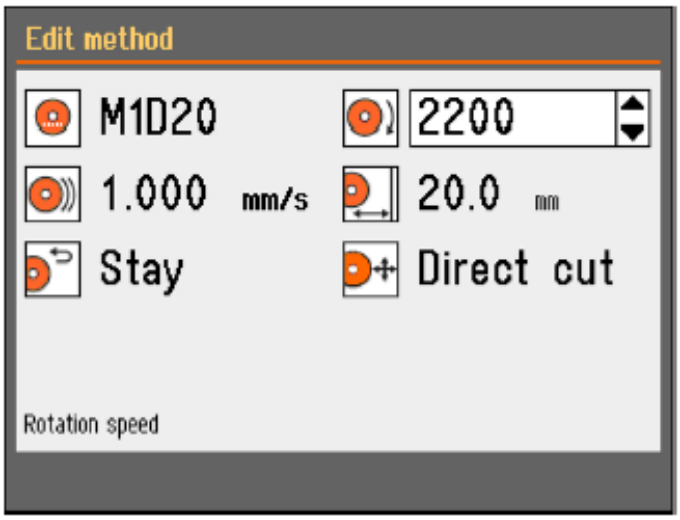

| Parameters | | | |
|---|---|---|---|
| | Cut-off wheel | | Rotational speed |
| | Feed speed | | Cutting length |
| | Return position | | Cutting mode |

**Change the settings**

1. Select the cutting method you wish to edit.
2. Select the cut-off wheel.
3. Select a cut-off wheel from the list.

   The recommended rotational speed (rpm) is shown.

   You can add user defined cut-off wheels to the list. See Creating a user defined cut-off wheel ► 50.

   The changes are saved automatically. You can reset the method to the default values. See The Maintenance menu ► 48.

## 7.6.2 Return position

The cut-off wheel can return to 3 positions after the cutting process is complete:

| Position | Description |
|---|---|
| **Start** | The cutting table returns to the start position. |
| **Zero** | The cutting table returns to zero position.<br>The zero position is calibrated after every 5th start-up, or if reference positions have been lost. You can calibrate the zero position. See The Maintenance menu ► 48. |
| **Stay** | The cutting table does not move after cutting. |

### 7.6.3 Cutting mode

There are two available options for cutting mode:

- **Direct Cut**
- **ExciCut**

#### Direct cut

Direct cutting is the normal cutting mode and is used for most materials.

#### ExciCut

ExciCut is a function used for cutting extremely hard materials.

> **Note**
> If you use ExciCut on materials other than extremely hard materials this can result in uneven specimens or a broken cut-off wheel.

When ExciCut is selected, the cut-off wheel moves up and down as the cutting table moves forward. The movement of the cut-off wheel has three main advantages: less wear on the cut-off wheel, less risk of damage to the workpiece and less risk of the motor overheating.

To ensure an optimal cut, make sure that the center of the cut-off wheel is at approximately the same height as the center of the workpiece before you start the cutting process. The distance from the cutting table (or automatic X-table if you are using this unit) to the center of the cut-off wheel is shown on the screen, making it easier to position the workpiece.

You can use ExciCut in the following situations:

- Workpieces with a diameter of less than 30 mm must be fastened in a specimen holder and held by the fixed stand, manual X-stand, or rotary-stand.

  If you are using a rotary stand, you can only select **ExciCut** when chuck mode is set to **Off**. See Rotary stand (optional) ► 44.
- Workpieces with a diameter of more than 30 mm can be cut using **ExciCut** without using a stand if an X-table is mounted or the workpiece is raised using shims.

### 7.6.4 OptiFeed

If the motor becomes overloaded during cutting (motor load > 150%), the OptiFeed function will automatically reduce the feed speed. When the overload has been reduced, the feed speed will be increased to the preset level.

## 7.7 Automatic X-table (optional)

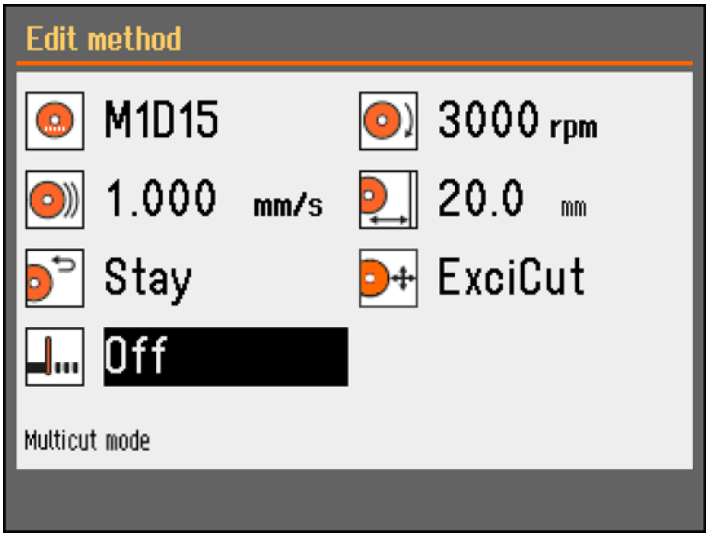


When an automatic X-table is connected, **Multicut mode** is shown on the cutting method screen.

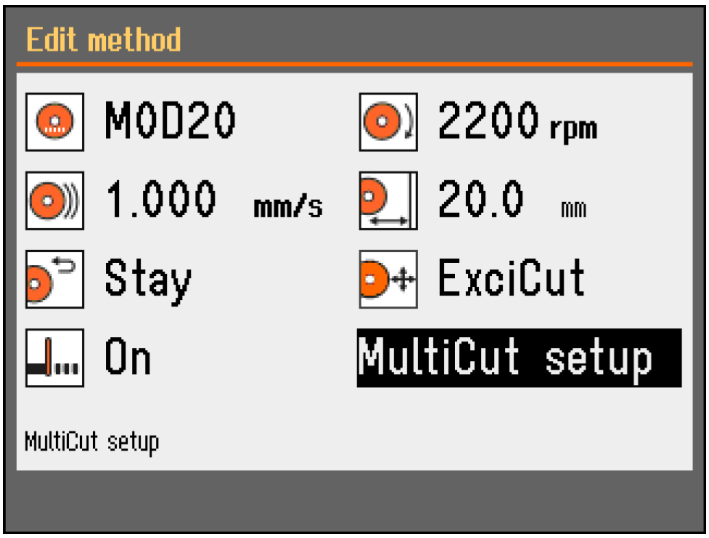


1. Set the MultiCut mode to **On**.

   The **MultiCut setup** dialog is shown.

2. Select **MultiCut setup**.

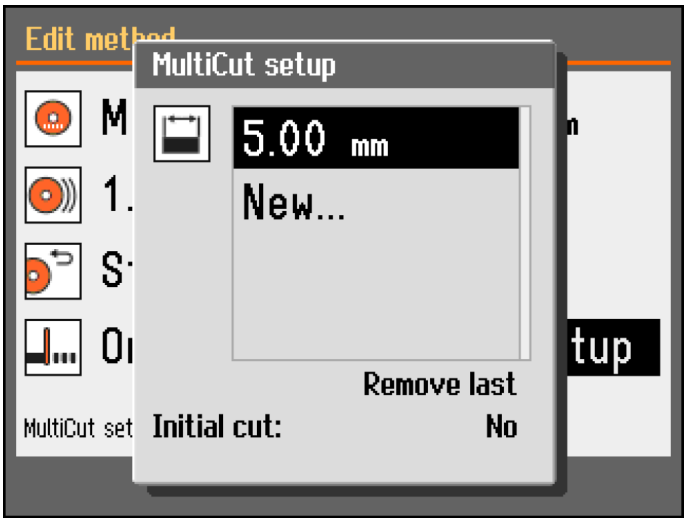


3. Enter the width of the specimens you wish to cut.

   You can set the width of up to 4 specimens.

#### Initial cut

If needed, set **Initial cut** to **Yes** to make an initial cut, before cutting the specimens you need. This cuts a scrap piece, which you will not use, for instance if the workpiece has an uneven edge that would make it unsuitable as a first specimen.

#### Procedure

1. From the **Configuration** screen, select **User defined cut-off wheels**.
2. Select **Configure**. A list of user defined cut-off wheels is shown.
3. Select **New wheel**.
4. Use the Turn/push knob in the text editor to enter a name for the new cut-off wheel. If needed, press Back to cancel the changes.
5. Enter the settings for the cut-off wheel.
6. Save the changes. Select **Save & Exit**.

### 7.7.1 Calculating the total specimen width

The total movement of the X-table is 40 mm.

The total possible width of all specimens is 40 mm minus the thickness of the cut-off wheel for each cut.

**Example**

| Cutting with an M0D20 cut-off wheel, 0.6 mm thick | |
|---|---|
| For 2 specimens, the total width possible will be: | 40 – (2 x 0.6) = 38.8 mm |
| For 3 specimens, the total width possible will be: | 40 – (3 x 0.6) = 38.2 mm |

## 7.8 Manual X-stand (optional)

When a manual X-stand is connected, the **Positioning** dialog shows the X-position.

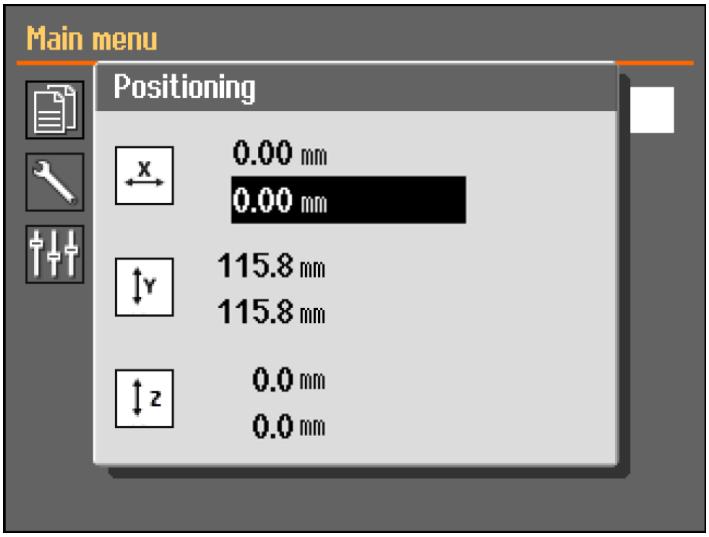


1. From the **Main menu** screen you can view the **Positioning** screen.
2. To open the **Positioning** screen, press and hold the Hold-to-run button and move the joystick.
3. If needed, reset the X-position for cutting a specific width.

## 7.9 Rotary stand (optional)

When a rotary stand is connected, a read-out for the chuck mode is shown and the **Positioning** dialog shows the X-position.

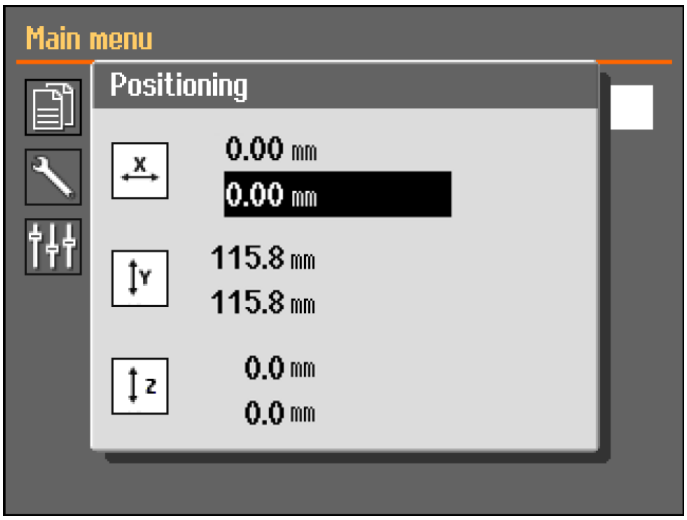


1. From the **Main menu** screen you can view the **Positioning** screen.
2. To open the **Positioning** screen, press and hold the Hold-to-run button and move the joystick.
3. If needed, reset the X-position for cutting a specific width.

### Chuck mode

**Hint**
**Chuck mode** must be set to **Off** before you can select **ExciCut**.

The following options are available in **Chuck mode**:

| | |
|---|---|
| **Off** | The specimen holder does not rotate. |
| **Continuously** | The specimen holder rotates continuously in the same direction as the cut-off wheel. |
| **Oscillating** | The specimen holder oscillates during the cutting process.<br>If needed, reset the X-position for cutting a specific width. |

## 7.10 Start the cutting process

1. Secure the workpiece on the cutting table.
2. Position the cutting table in the correct place.
3. Make sure the coolant nozzles are lowered into position.
4. Close the guard. The machine cannot be started before the guard is closed.

**Note**
You cannot open the guard when cutting is in progress.

5. Select a cutting method.
6. If needed, check and change the settings.
7. To start the cutting process, press Start.
8. If needed, you can change the settings for **Feed speed**, **Rotation speed** and **Cutting length** during the cutting process.

**Note**
Make sure there is a steady flow of coolant from the nozzles.

## 7.11 Stop the cutting process

When the specified cut length is reached, the cut-off wheel automatically stops rotating and the cutting table returns to the selected stop position.

**Hint**
You can stop the cutting process at any time by pressing Stop.

If you have stopped the machine by pressing Stop, the cutting table stays in position.

### Moving the cutting table after finishing or canceling cutting

When the guard is closed:

1. Shortly press the Y-table joystick downwards.
2. The cutting table will automatically move to zero position.

When the guard is open:

1. Hold the hold-to-run button.
2. Press the Y-table joystick downwards.
3. The cutting table will move as long as both the joystick and the hold-to-run button are active.

**Hint**
During cutting, you can move the workpiece away from the cut-off wheel by pressing the Y-table joystick downwards.

## 7.12 Flushing hose

**CAUTION**
Avoid skin contact with the coolant additive.
Always wear protective gloves and safety goggles.

**CAUTION**
Do not start flushing before the flushing hose is pointing into the cutting chamber.

The machine is delivered with a flushing system for cleaning the cutting chamber of debris discarded during the cutting process. Flushing is operated from the control panel.

### Procedure

**CAUTION**
Mind the protruding safety catch when the safety guard is raised.

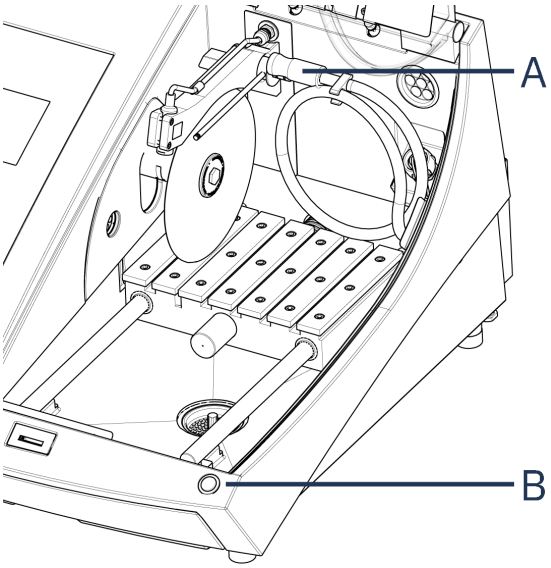


| | | | |
|---|---|---|---|
| **A** | Flushing hose | **B** | Hold-to-run button |

1. Remove the hose from the coolant nozzles.

2. On the control panel, press Flush.
3. Point the hose into the cutting chamber.

- To start flushing, press and hold the Hold-to-run button.
- To stop flushing, release the Hold-to-run button.

4. When you have finished flushing the cutting chamber, place the hose in its holder.

# 8 The Maintenance menu

From the **Maintenance** screen you can choose between the following options:

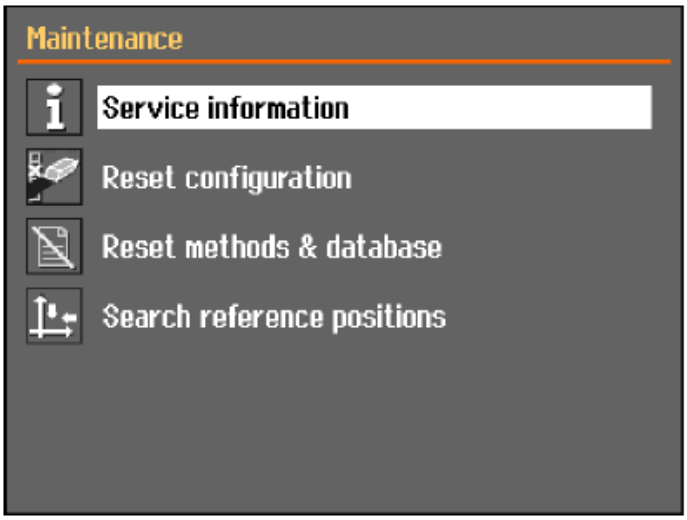


| | |
|---|---|
| **Service information** | Information about the equipment. This information is mainly used in connection with service. SeeThe Service menu ► 48. |
| **Reset configuration** | Resets all settings that are accessible from the **Configuration** menu to default values. |
| **Reset methods & database** | Resets all methods and the database to default values. |
| **Search reference positions** | Reference position (Zero position) is calibrated after every 5th start-up, or if reference positions have been lost.<br>If reference positions have been lost they can be reset manually. |

## 8.1 The Service menu

Service information is read-only information. Machine settings cannot be changed.

Service information can be used in cooperation with Struers Service for remote diagnostics of the equipment.

The service information is available only in English.

### Maintenance

See Maintenance and service ► 52.

### Service

See Service and repair ► 65.

### The menu

From the screen you can choose between the following options:

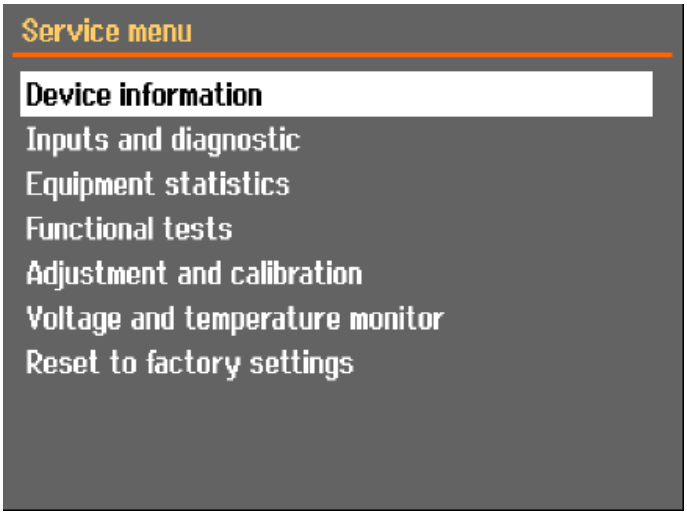


- **Device information**
- **Inputs and diagnostic**
- **Equipment statistics**
- **Functional tests**
- **Adjustment and calibration**
- **Voltage and temperature monitor**
- **Reset to factory settings**

  Resets all methods and the database to default values.

# 9 Configuration menu

From the **Configuration** menu you can set up general parameters.

- From the **Main menu** select **Configuration**.

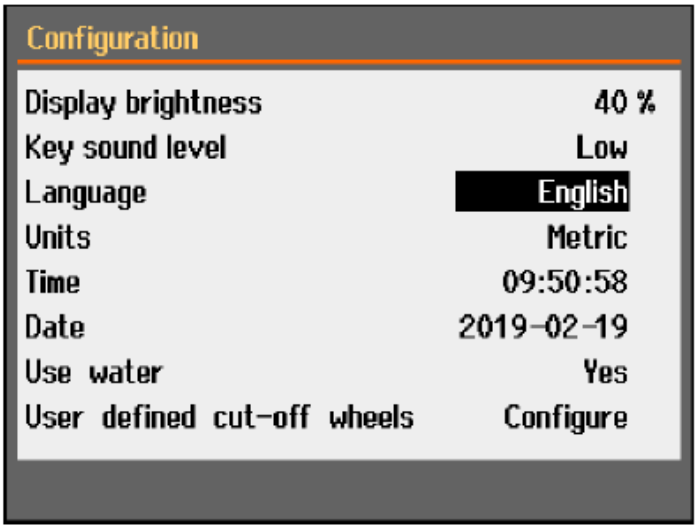


| Parameter | Setting |
|---|---|
| **Display brightness** | You can adjust the display to make it easier to view. |
| **Key sound level** | When you press a button on the control panel, a sound is heard. |
| **Language** | Select the language you wish to use in the software. |
| **Units** | Select the unit system:<br>– **Metric**<br>– **Imperial** |
| **Time** | Set the time. |
| **Date** | Set the date. |
| **Use water** | Select **No** or **Yes**. |
| **User defined cut-off wheels** | See also Creating a user defined cut-off wheel ► 50 |

## 9.1 Creating a user defined cut-off wheel

### Procedure

1. From the **Configuration** screen, select **User defined cut-off wheels**.
2. Select **Configure**. A list of user defined cut-off wheels is shown.

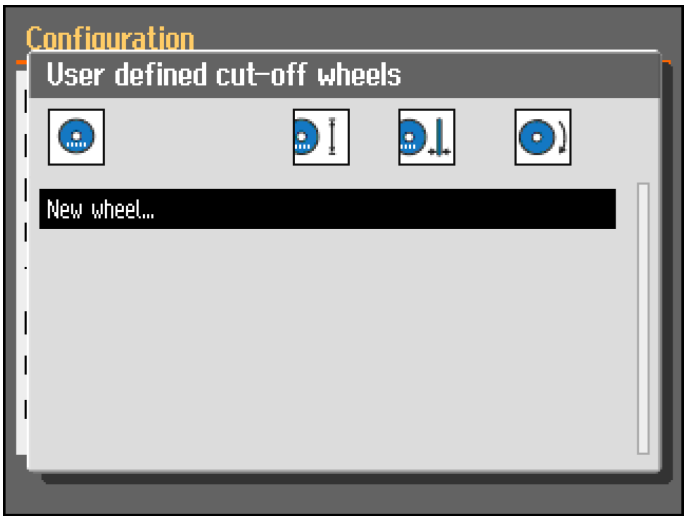


3. Select **New wheel**.

4. Enter a name for the new wheel. If needed, press Back to cancel the changes.

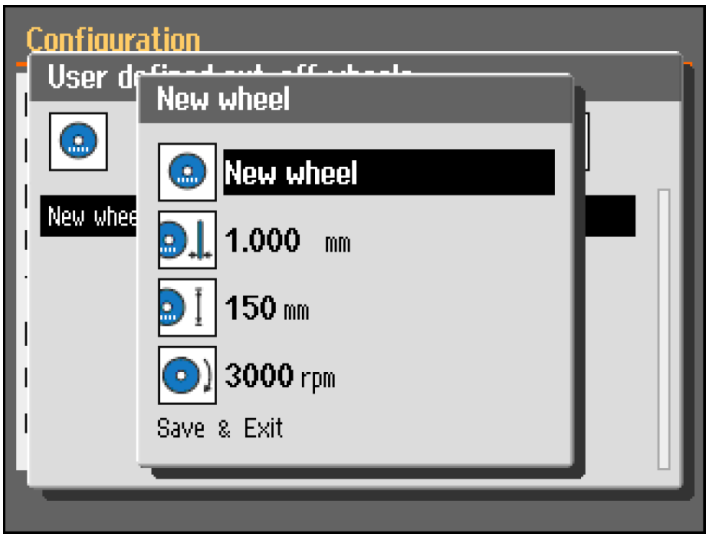


5. Enter the settings for the wheel.
6. Select **Save & Exit**.

# 10 Maintenance and service

Proper maintenance is required to achieve the maximum up-time and operating lifetime of the machine. Maintenance is important in ensuring continued safe operation of your machine.

The maintenance procedures described in this section must be carried out by skilled or trained personnel.

### Safety Related Parts of the Control System (SRP/CS)

For specific safety related parts, see the section "Safety Related Parts of the Control System (SRP/CS)" in the section "Technical data" in this manual.

### Technical questions and spare parts

If you have technical questions or when you order spare parts, state the serial number and the voltage/frequency. The serial number and the voltage are stated on the name plate of the machine.

## 10.1 General cleaning

To ensure a longer lifetime for your machine, we strongly recommend regular cleaning.

**Note**
Clean the cutting chamber daily and if the machine is not to be used for a period of time.

**Note**
Do not use a dry cloth as the surfaces are not scratch resistant.

**Note**
Do not use acetone, benzol or similar solvents.

#### If the machine is not to be used for a long period of time

- Clean the cutting chamber thoroughly.
- Clean the machine and all accessories thoroughly.

## 10.2 Clamping devices

**Note**
We recommend that you thoroughly clean and lubricate the quick clamping device and the vertical quick clamping device at regular intervals.

## 10.3 Cutting tables

The stainless-steel bands (available as spare parts) should be replaced if damaged or worn.

#### Turn or replace the steel bands on the cutting table

During regular use, it is not uncommon for the cutting table steel bands located on either side of the cutting area to be damaged.

- If the bands are only damaged on one side, you can turn them.
- If they are very badly damaged or damaged on both sides, replace the bands.

## 10.4 Cut-off wheels

#### Storing abrasive cut-off wheels

Abrasive cut-off wheels are sensitive to humidity. Therefore, do not mix new, dry cut-off wheels with used, humid ones. Store the cut-off wheels in a dry place, horizontally on a plane support.

#### Maintenance of diamond and CBN cut-off wheels

To ensure the precision of diamond and CBN cut-off wheels (and consequently the cut), follow these instructions carefully.

1. Never expose the cut-off wheel to a heavy mechanical load or heat.

2. Store the cut-off wheel in a dry place, horizontally on a plane support, preferably under light pressure.
3. A clean and dry cut-off wheel does not corrode. Therefore, clean and dry the cut-off wheel before storing. If possible, use ordinary detergents for cleaning.
4. Regular dressing of the cut-off wheel is part of the general maintenance.

### Dressing diamond and CBN cut-off wheels

**Hint**
Do not perform more dressing than necessary as this will cause needless wear on the wheel.

**Hint**
A badly dressed cut-off wheel is the most frequent reason for damage to the wheel.

A newly dressed cut-off wheel will give an optimal cut. A badly maintained and dressed cut-off wheel demands a higher cutting pressure that will result in more frictional heat.

The wheel may also bend and cause a skew cut.

A combination of both factors may result in damage to the cut-off wheel.

To dress the cut-off wheel, use the aluminum oxide dressing stick supplied with the cut-off wheel.

There are two methods to dress a cut-off wheel:

*Method 1*

1. Clamp the dressing stick like you would clamp a workpiece.
2. Use a moderate feed speed and plenty of coolant to cut through the dressing stick.
3. Repeat the treatment if the cut-off wheel does not cut satisfactorily.

*Method 2*

- Use a manual dresser.

### Test your cut-off wheels

Cut-off wheels must be tested before use.

*Test an abrasive cut-off wheel for damage*

1. Visually inspect the surface for cracks and chips.
2. Mount the cut-off wheel, close the guard and let the wheel rotate at full speed.

   If there is no visible damage and the cut-off wheel did not break during the high-speed test, it has passed the test. If the cut-off wheel shows cracks, it is unsafe to use and must be replaced.

*Test a diamond/CBN cut-off wheel - the ring test*

To test a diamond/CBN cut-off wheel, perform a ring test.

1. Let the cut-off wheel hang over your index finger.
2. With a pencil (not metal), gently tap the cut-off wheel around the edge.
3. The cut-off wheel passes the test if it gives a clear metallic tone when tapped. If the cut-off wheel sounds dull or muted, it is cracked and unsafe to use and must be replaced.

## 10.5 Change the tubes

### Procedure

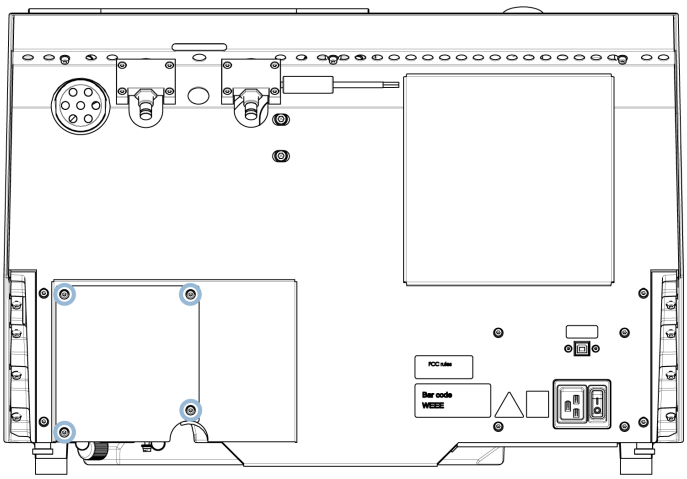


1. Remove the four screws on the protection plate on the rear of the machine.

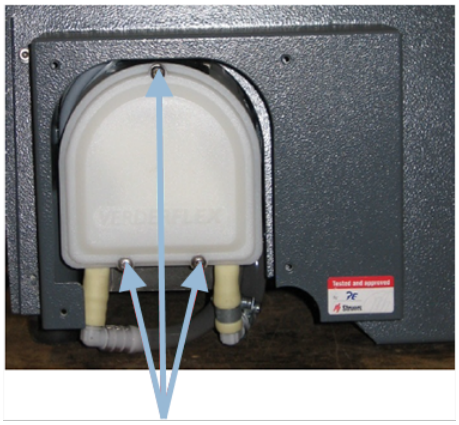

2. Remove the three screws on the cover of the cooling pump.

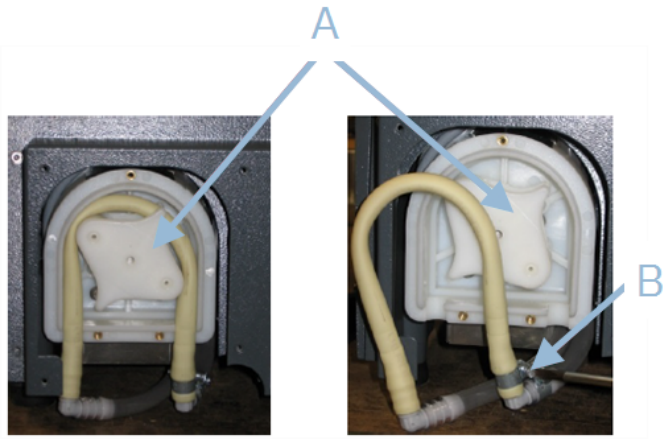


| | |
|---|---|
| **A** Pump axle | **B** Hose clamp |

3. Remove the tube from the pump axle.
4. Loosen the hose clamp and carefully remove the tube ends from the connectors.
5. Attach the new tube to the connectors and tighten the hose clamp. The hose clamp should be on the end of the tube that directs water into the cutting chamber, as this will have the greatest pressure.
6. Lubricate the tube along its length with the supplied silicone grease. This will help the rollers in the pump to turn smoothly.
7. Press the tube into position around the pump axle.
8. Mount the tube correctly in the pump

**Correct**

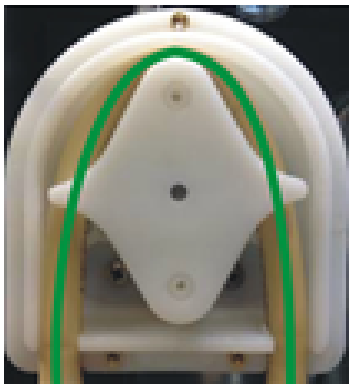

**Incorrect**

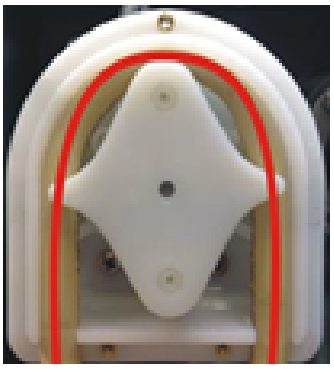

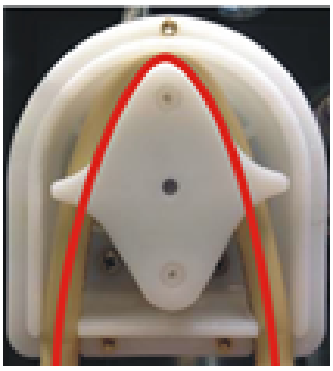

**The pump tube is too loose**

Excess volume between the rollers will press "waves" of fluid which will stretch the tube.

The lifetime of the tube will be reduced.

**The pump tube is too tight**

The tube is stretched.

The lifetime of the tube will be reduced.

9. Remount the bottom cover.
10. Remount the protection plate.

## 10.6 Daily

- Check the machine before use. Do not use the machine until any damage is repaired.

### Check the guard

**WARNING**
Replace the guard immediately if it has been weakened by collision with projectile objects or if there are visible signs of deterioration or damage.

- Visually inspect the guard for signs of wear or damage (e.g. dents, cracks, damage to the edge sealing).
- If the guard is damaged, replace it. See The guard ► 62.

### Check the guard safety lock

**Note**
Check the interlock tongue regularly to make sure that it is not is not damaged and that it fits perfectly in the locking mechanism.

- Make sure that the interlock tongue slides easily into the locking mechanism.

### Daily maintenance

**CAUTION**
Read the Safety Data Sheet for the additive for coolant before use.
Avoid skin contact with the coolant additive.

**CAUTION**
Wear suitable gloves to protect fingers from abrasives and hot/sharp specimens.
Coolant can contain swarf (cutting and grinding debris or other particles.

**CAUTION**
Do not start flushing until the flushing hose is pointing into the cutting chamber.

**Note**
Never use acetone, benzol or similar solvents.

**Hint**
Do not use a dry cloth as the surfaces are not scratch resistant.

**Hint**
If needed, use ethanol or isopropanol to remove grease and oil.

- Clean all accessible surfaces with a soft, damp cloth.
- Clean the cutting chamber, particularly the T-slot cutting table.
- If needed, clean the drain basket and the magnet in the tank.
- Clean the specimen holder and the flanges.
- Leave the guard open when the machine is not in use to let the cutting chamber dry completely.

## 10.7 Weekly

Clean the machine to prevent the machine and specimens from being damaged by abrasive grains or metal particles.

**Note**
Do not use harsh or abrasive cleaning agents.

- Clean all accessible surfaces with a soft damp cloth and common household detergents.
- For heavy duty cleaning, use Struers Cleaner.

- Clean the safety guard with a soft damp cloth and a common, household anti-static window cleaning agent.

**Note**
To prevent excess foaming from occurring, make sure that no detergent or cleaning agent residue is flushed into the cooling unit tank.

### 10.7.1 Clean the cutting chamber

- Remove the clamping device(s).
- Store the clamping device(s) in a dry place or place them on the cutting table after cleaning.
- Clean the cutting chamber thoroughly.
- Check the drain basket and the magnet.

**Note**
A blocked drain can result in overflow and insufficient cooling if the level of fluid in the tank is too low. This can damage the workpiece or the cut-off wheel.

### 10.7.2 Check the coolant tank

**CAUTION**
Read the Safety Data Sheet for the additive for coolant before use.

**CAUTION**
Avoid skin contact with the coolant additive.
Wear suitable gloves to protect fingers from abrasives and hot/sharp specimens. Coolant can contain swarf (cutting and grinding debris or other particles.

**Hint**
We recommend that you change the coolant at least once a month to prevent the growth of microorganisms.

- Check the coolant level after 8 hours of use or at least every week. If needed, refill the tank.
- Replace the coolant if it appears to be contaminated (build-up of cutting debris).
- Add coolant additive.
- Use a refractometer to check the concentration of additive. See the instructions for use on the label.

**Coolant nozzles**

- If the coolant nozzles are blocked, clear the blockage with a thin piece of wire (e.g. a paper clip).

  If needed, remove the screw from the tip of the right nozzle to facilitate cleaning.

### 10.7.3 Tube for water-free coolant

If you are using water-free coolant, you must replace the tube in the coolant pump with a special tube for water-free coolant. The tube for water-free coolant is more resistant to the components of the water-free coolant. The standard tube only lasts for a few hours, as it is affected by the water-free coolant.

For details on changing the pump tube, see Change the tubes ► 55.

**Note**
If you have mounted the tube for water-free coolant, check it for wear regularly. The frequency for changing the tube varies depending on specific conditions. We recommend that you visually check the tube for wear after every 5 hours of use.

## 10.8 Monthly

### 10.8.1 Clean the coolant tank

**CAUTION**
Read the Safety Data Sheet for the coolant additive before use.

**CAUTION**
Avoid skin contact with the coolant additive.
Wear suitable gloves to protect fingers from abrasives and hot/sharp specimens.
Coolant may contain swarf (cutting and grinding debris or other particles).

Replace the coolant in the coolant tank at least once a month.

### Procedure

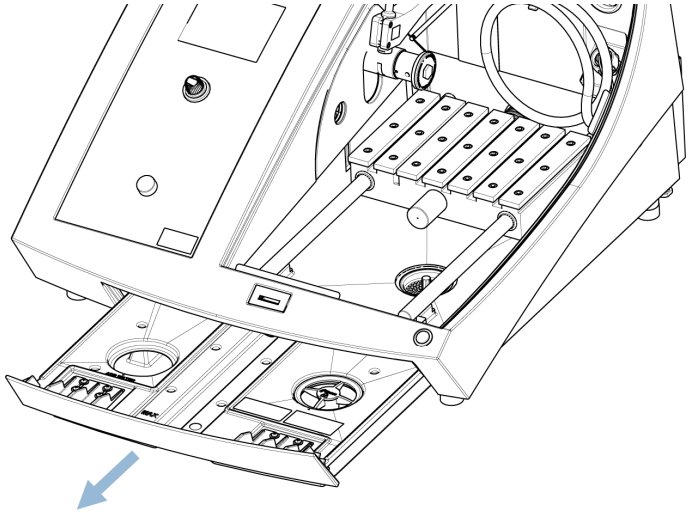

1. Gently slide out the coolant tank.
2. Remove the screw cap.
3. Pour out the used coolant into a drain approved for waste chemicals.
4. Rinse the tank with clean water. Shake the tank occasionally to release any debris that has accumulated on the bottom of the tank.
5. Repeat the rinsing process until the tank is clean.
6. Refit the screw cap.
7. Slide the tank back into position.
8. Fill the tank through the hole in the base of the chamber with a 4% solution of coolant additive: 190 ml coolant additive and 4.5 L water.

**Hint**
For water-sensitive materials, use a water-free coolant.

**Note**
Do not overfill the tank.

**Note**
Flush the recirculation cooling system with clean water if the machine is not to be used for a longer period of time. This will prevent any dried-up residue of cutting material from damaging the inside of the pump.

## 10.9 Annually

### 10.9.1 The guard

**WARNING**
Do not use the machine with defective safety devices.
Contact Struers Service.

**WARNING**
To ensure its intended safety, the guard must be replaced every 2 years. A label on the guard indicates when it is due to be replaced.

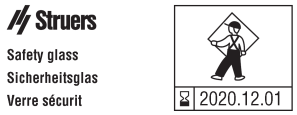


**Note**
Replace the guard immediately if it has been weakened by collision with projectile objects or if there are visible signs of deterioration or damage.

**Note**
If the machine is used for more than one 7-hour shift per day, carry out inspection more often.

**Note**
The screen must be replaced to remain compliant with the safety requirements stated in EN 16089.

The guard consists of a metal frame and a composite material that protects the operator. If the guard is damaged, it will be weakened and will offer less protection.

#### Procedure

1. Visually inspect the guard for signs of wear or damage such as cracks or dents.
2. If the guard is damaged, replace it immediately.

### 10.9.2 Test the safety devices

**WARNING**
Do not use the machine with defective safety devices.
Contact Struers Service.

**Note**
Testing should always be performed by a qualified technician (electromechanical, electronic, mechanical, pneumatic, etc.).

The safety devices must be tested at least once a year.

The guard has a safety switch system to prevent the cut-off wheel motor from starting when the guard is open.

A locking mechanism prevents the operator from opening the guard until the motor stops spinning.

### 10.9.3 Emergency stop

**WARNING**
Do not use the machine with defective safety devices.
Contact Struers Service.

#### Test 1

1. Press Start.

   Operation starts.
2. Press the emergency stop.
3. If operation does not stop, press Stop.

   Contact Struers Service.

#### Test 2

1. Press the emergency stop.
2. Press Start.
3. If operation starts, press Stop.

   Contact Struers Service.

### 10.9.4 The guard lock

**WARNING**
Do not use the machine with defective safety devices.
Contact Struers Service.

#### Test 1

1. Press Start.

   Operation starts.
2. Try to open the guard – do not use force.
3. If the guard opens, press Stop.

   Contact Struers Service.

#### Test 2

1. Open the guard.
2. Press Start.

3. If operation starts, press Stop.

   Contact Struers Service.

#### Test 3

1. Press Start.

   Operation starts.

2. Press Stop. If it is possible to open the guard while the cut-off wheel still rotates, contact Struers Service.

### 10.9.5 The hold-to-run button

**WARNING**
Do not use the machine with defective safety devices.
Contact Struers Service.

#### Test 1

1. Open the guard.
2. Without pressing the hold-to-run button, use the joy stick to move the cutting table.
3. If the cutting table moves, contact Struers Service.

#### Test 2

1. Open the guard.
2. Press Flush.
3. If coolant starts to flow, press Flush or Stop and contact Struers Service.

## 10.10 Spare parts

#### Technical questions and spare parts

If you have technical questions or when you order spare parts, state the serial number and the voltage/frequency. The serial number and the voltage are stated on the name plate of the machine.

For further information, or to check the availability of spare parts, contact Struers Service. Contact information is available on Struers.com.

#### Spare parts list

| Spare parts | Electrical ref. | Catalog no. |
|---|---|---|
| Sick IMB08 | HQ1, HQ2 | 2HQ00032 |
| Omron E2B_All | HQ3, HQ4 | 2HQ00036 |
| Speed monitor | KS3, KS4 | 2KS10033 |

| Spare parts | Electrical ref. | Catalog no. |
|---|---|---|
| Safety relay | KS1, KS2 | 2KS10006 |
| Safety sensor | SS1 | 2SS00130 |
| Inverter | A2 | 2PU12076 |
| Relay 24 V AC/DC | K3, K4 | 2KL23851 |
| Emergency stop button | SB1 | 2SA10400 |
| Emergency stop contact | SB1 | 2SB10071 |
| Module holder | SB1 | 2SA41603 |
| Hold-to-run button | S2 | 2SA00025 |
| Guard lock | YS1 | 2SS00025 |
| Guard | - | 16852901 |
| Contactor | K1, K2 | 2KM70912 |

## 10.11 Service and repair

Information on total operation time and servicing of the machine is displayed on the screen at start-up.

We recommend that a regular service check be carried out yearly or after every 1500 hours of use.

When the machine is started up, the display shows information about total operation time and the machines service information.

After 1400 hours of operation time, the display will show a message reminding the user that a service check should be scheduled.

When 1500 hours of operation time has been exceeded, the display will show the message **Service period expired**.

**Note**
Service must only be performed by a qualified technician (electromechanical, electronic, mechanical, pneumatic, etc.).
Contact Struers Service.

### Service check

We offer a range of comprehensive maintenance plans to suit the requirements of our customers. This range of services is called ServiceGuard.

The maintenance plans include equipment inspection, replacement of wear parts, adjustments/calibration for optimal operation, and a final functional test.

### The Maintenance menu

See The Maintenance menu ► 48.

**The**

See The Service menu ► 48.

## 10.12 Disposal

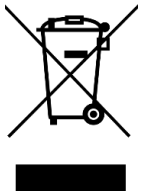

Equipment marked with a WEEE symbol contains electrical and electronic components and must not be disposed of as general waste.

Contact your local authorities for information on the correct method of disposal in accordance with national legislation.

For disposal of consumables and recirculation fluid, follow local regulations.

**WARNING**
In case of fire, alert bystanders, the fire brigade and cut power. Use a powder fire extinguisher. Do not use water.

**Note**
The recirculation fluid will contain additive and cutting or grinding swarf.
Do not dispose of the recirculation fluid into a main drain.
Follow the current safety regulations for handling and disposal of swarf and additive for recirculation fluid.

Keep track of which metals you cut or grind and the amount of swarf produced.

Depending on which metals you cut or grind, it is possible that the combination of the metallic swarf from metals with a large difference in electropositivity, can result in exothermic reactions when favorable conditions are present.

**Examples:**

The following are examples of combinations which can result in exothermic reactions if a large amount of swarf is produced during cutting or grinding on the same machine, and when favorable conditions are present:

- Aluminum and copper
- Zinc and copper

# 11 Troubleshooting

## 11.1 Machine problems

| Problem | Cause | Action |
|---|---|---|
| No, or insufficient, coolant. | The level in the coolant tank is too low. | Make sure that there is sufficient water in the coolant tank. |
| | The coolant nozzles are blocked. | Clean the nozzles. |
| Water is leaking. | Leak in the coolant tube. | Check the coolant pump tube.<br>If needed, replace the tube. |
| | Water overflow in the coolant tank. | Remove the excess water. |
| | The basket for cutting debris is blocked. | Clean the basket. |
| Workpieces are rusty. | There is insufficient additive in the coolant. | Check the concentration of additive in the coolant. |
| The cutting chamber is rusty. | There is insufficient additive in the coolant. | Check the concentration of additive in the coolant. |
| | The guard was left closed after use. | Leave the guard open to let the cutting chamber dry. |
| The cutting chamber shows signs of corrosion. | The workpiece is made of copper/copper alloy. | Use a coolant additive that is specifically formulated for copper and copper alloys. |

## 11.2 Cutting problems

| Problem | Cause | Action |
|---|---|---|
| Discoloration or burning of the workpiece. | The hardness of the cut-off wheel does not match the hardness/dimensions of the workpiece. | Select another wheel or reduce the rotational speed. |
| | Inadequate cooling. | Check the positioning of the coolant nozzles. If needed, clean the nozzles. |
| | | Make sure that there is sufficient water in the coolant tank. |
| | | Check the concentration of additive in the coolant. |
| Unwanted burrs. | The cut-off wheel is too hard. | Select another wheel or reduce the rotational speed. |
| | The feed speed is too high at the end of the operation. | Reduce the feed speed towards the end of the operation. |
| | Incorrect clamping of the workpiece. | Support the workpiece and clamp it on both sides. Use a specimen holder that is designed for clamping small, long workpieces on both sides. |
| The cutting quality varies. | Inadequate cooling. | Check the positioning of the coolant nozzles. If needed, clean the nozzles. |
| | | Make sure that there is sufficient water in the coolant tank. |
| | | Check the concentration of additive in the coolant. |

| Problem | Cause | Action |
|---|---|---|
| The cut-off wheel breaks. | Incorrect mounting of the cut-off wheel. | Make sure that the bore/centre hole has the correct diameter. The nut must be tightened properly. |
| | Incorrect clamping of the workpiece. | Support the workpiece and clamp it on both sides. Use a specimen holder that is designed for clamping small, long workpieces on both sides. |
| | The cut-off wheel is too hard. | Select another wheel or reduce the rotational speed. |
| | The feed speed is set too high. | Reduce the feed speed. |
| | The force level is set too high. | Reduce the force level. |
| | The cut-off wheel bends on contact with the workpiece. | Make an initial cut at a lower feed speed. |
| The cut-off wheel wears down too quickly. | The feed speed is too high. | Reduce the feed speed. |
| | The rotational speed is too low. | Increase the rotational speed. |
| | Insufficient cooling. | Make sure that there is enough water in the coolant tank.<br>Check the positioning of the coolant nozzles.<br>If needed, clean the nozzles. |
| The cut-off wheel does not cut through the workpiece. | The rotational speed is too low. | Increase the rotational speed. |
| | Incorrect choice of cut-off wheel. | Select another cut-off wheel. |
| | The cut-off wheel is worn. | Replace the cut-off wheel. |

| Problem | Cause | Action |
|---|---|---|
| The workpiece breaks when clamped. | The cut-off wheel gets caught in the workpiece during cutting. | Clamp the workpiece on both sides of the cut-off wheel so that the cut stays open. Use a specimen holder that is designed for clamping small, long workpieces on both sides. |
| | The workpiece is brittle. | Place the workpiece between two plastic/rubber plates or mount the workpiece in resin.<br>**Note**<br>Always cut brittle workpieces very carefully. |
| The specimen is corroded. | The specimen has been left in the cutting chamber for too long. | Remove the specimen directly after cutting. Leave the cutting chamber guard open when you leave the machine. |
| | Insufficient additive for coolant. | Check the concentration of additive in the coolant. |
| The laser is misaligned. | | Loosen the screws on the rear of the machine.<br>Adjust the laser until it is aligned in the correct position.<br>**WARNING**<br>Laser radiation. Do not stare into the beam or expose users of telescopic optics. Class 1M laser product. |

## 11.3 Error messages

| No. | Messages | Cause | Action |
|---|---|---|---|
| 8 | Selected cut length exceeds available cutting capacity.<br>OK: Automatic cut length will be set.<br>Cancel: Go back to edit method. | The cutting capacity for the set length is insufficient. | Select **OK** to set cut length automatically or **Cancel** to edit method. |
| 106 | Machine failed during Power-On Self Testing. Please try to restart the machine. If problem persists, please contact Struers technical support. | A critical error is detected during power-on self-testing.<br>The machine will not start. | Restart the machine.<br>If the error remains, contact Struers Service. |
| 110 | Machine found a problem during Power On Self Testing.<br>Machine can continue. However, it is strongly recommended to contact Struers technical support. Some features may not be available. | A critical error is detected during power-on self-testing. | Restart the machine.<br>If the error remains, contact Struers Service. |
| 113 | Water pump blocked! | | Check the coolant level. If the level is low, refill the coolant tank.<br>Replace the coolant if it appears dirty (build-up of cutting debris).<br>If the error remains, contact Struers Service. |
| 114 | Machine searching for reference positions.<br>Please wait...<br>Don't switch machine off! | Zero positions are calibrated after every 5th start-up, or if the reference position has been lost or if the emergency stop has been activated under start-up. | Wait until the process is completed. |

| No. | Messages | Cause | Action |
|---|---|---|---|
| 117 | Water pump blocked!<br>Process halted!<br>Clean cooling system before continuing. | | Check the coolant level. If the level is low, refill the coolant tank.<br>Replace the coolant if it appears dirty (build-up of cutting debris).<br>If the error remains, contact Struers Service. |
| 119 | Main motor overload detected!<br>Reduce feed speed before continuing. | The cut-off wheel may be caught in the workpiece. | Move the cutting table backwards to release the cut-off wheel.<br>Reduce the feed speed and continue cutting. |
| | | The OptiFeed feature is unable to decrease the main motor load to an acceptable level. | Manually reduce the feed speed and continue cutting. |
| 120 | Reference position for automatic X-table will now be scanned.<br>Confirm to start searching. | An automatic X-table has been connected and zero position will now be scanned. | Check that there are no obstacles in the cutting chamber and press Enter. |
| 122 | Selected combination of specimen width and number exceeds available cutting capacity.<br>Enter: automatic specimen width<br>Esc: automatic specimen count<br>Stop: return to edit method | The space for the required serial cutting is insufficient. | Select **Enter** to adjust the specimen width automatically, **Esc** to adjust the number of specimens automatically or **Stop** to edit the method. |
| 123 | Automatic X-table stuck.<br>Process halted!<br>Remove any obstruction before continuing.<br>Start: Resume cutting<br>Stop: Abort current process | | Make sure that there are no obstacles blocking the auto X-table before continuing cutting.<br>If the error remains, contact Struers Service. |

| No. | Messages | Cause | Action |
|---|---|---|---|
| 125 | Main motor overheated!<br>Cutting process halted!<br>Please wait until motor temperature decreases before continuing cutting. | The temperature of the main motor has exceeded 150°C for more than 5 sec. | Wait for the motor to cool. |
| 126 | Main motor cannot start.<br>Process halted!<br>Please try to restart the machine if problem occurs after next start. | | Switch the machine off and then on.<br>If the error remains, contact Struers Service. |
| 127 | Main motor rotation lost.<br>Process halted!<br>Try to restart cutting process.<br>Alarm register: xxxx<br>Error register: xxxx | The cutting process has been aborted. | Make a note of the Alarm register and Error register values.<br>Restart the cutting process.<br>If the error remains, contact Struers Service. Quote the Alarm register and Error register values. |
| 128 | Open safety lock detected.<br>Process halted!<br>Restart the process - do not open guard during operation! | Sensors register that the guard lock is open during cutting. | Make sure that the guard is closed, and the guard lock is engaged.<br>If the error remains, contact Struers Service. |
| 129 | Searching of reference positions aborted by user. Machine cannot continue without reference positions found.<br>Please restart the machine and wait until reference positions are scanned. | The emergency stop has been activated while the machine was scanning for zero-positions. | Restart the machine.<br>Wait until the scan for zero-positions is complete. |
| 130 | Motor drive overloaded!<br>Process halted!<br>Please decrease RPM and/or feed speed before continuing cutting. | The load on the motor has caused an overload. | Decrease the RPM and/or feed speed before continuing cutting. |

| No. | Messages | Cause | Action |
|---|---|---|---|
| 133 | Cut-off wheel Z-position out of range.<br>Please make sure that cut-off wheel is at least 0.15mm from top and bottom position or disable ExciCut feature. | **ExciCut** has been selected but there is insufficient space for the wheel to move up/down. | Reposition the cut-off wheel or deselect **ExciCut**. |
| 144 | Search for reference positions failed. | No power detected on stepper motors during attempt to reference positions. | Confirm the dialog and reboot the machine. Reference searching procedure will be repeated each restart until valid ref positions are found. |

| No. | Error message | Cause | Action |
|---|---|---|---|
| 001 | SMM not present! | Struers Memory Module is not connected correctly to machine. | Restart the machine.<br>If the error remains, contact Struers Service. |
| 002 | Inverter communication failed! | The machine is not able to communicate with the frequency inverter. | Restart the machine.<br>If the error remains, contact Struers Service. |
| 003 | Joystick not connected! | The machine did not detect the joystick. | Restart the machine.<br>If the error remains, contact Struers Service. |
| 004 | Mains voltage too low! | The main electrical power voltage is lower than 220 V. | Make sure that the main electrical power voltage corresponds to the voltage stated on the type plate on the machine.<br>Restart the machine.<br>If the error remains, contact Struers Service. |
| 005 | Problem with 24V supply voltage | The DC supply voltage is lower than 18 V. | Restart the machine.<br>If the error remains, contact Struers Service. |
| 006 | 5V supplying out of range | The 5 V power supply on the PCB is lower than 4 V. | Restart the machine.<br>If the error remains, contact Struers Service. |

| No. | Error message | Cause | Action |
|---|---|---|---|
| 007 | SMM read-write test failed | Communication with the Struers Memory Module is unsuccessful. | Restart the machine.<br>If the error remains, contact Struers Service. |
| 008 | Y-table motor not connected | Communication with the Y-table stepper motor unit failed. | Restart the machine.<br>If the error remains, contact Struers Service. |

| No. | Warning messages | Cause | Action |
|---|---|---|---|
| 001 | Mains voltage too low | The main electrical power voltage is lower than 180 V. | Make sure that the main electrical power voltage corresponds to the voltage stated on the type plate on the rear of the machine.<br>Restart the machine.<br>If the error remains, contact Struers Service. |
| 002 | Z-motor communication failed | Communication with the Z-movement stepper motor unit failed. | Restart the machine.<br>If the error remains, contact Struers Service. |

# 12 Technical data

## 12.1 Technical data

| | | |
|---|---|---|
| **Capacity** | Height x Length | 165 x 50 mm (6.5" x 2") |
| | Diameter | 70 mm (2.8") |
| | Cutting length | 0 - 200 mm (0 - 7.9") in steps of 0.1 mm |
| **Cut-off wheel** | Diameter | 75 - 203 mm (3 - 8") |
| | Arbor diameter | 12.7 mm (0.5") and 22 mm (0.86") |
| **Cut-off wheel motor** | Rotational speed | 300 - 5,000 rpm in steps of 100 rpm |
| | Height adjustment of cut-off wheel | 40 mm (1.6") automatic |

| | | |
|---|---|---|
| **Cutting table** | Width | 258 mm (10.2") |
| | Depth | 184 mm (7.2") |
| | T-slots | T-slot with exchangeable T-slot plates, 8.0 mm (7 pcs.) |
| | Feed speed | 0.005 - 3.0 mm/s (0.3 - 7"/min.) in steps of 0.005 mm |
| **Laser** | | Class 1M |
| **Software and electronics** | Controls | Touch pad, joystick, and turn/push knob |
| | Display | LCD, TFT-color 5.7", 320 x 240 dots with LED back light |
| **Safety standards** | | CE labeled according to EU directives |
| **REACH** | | For information about REACH. contact your local Struers office |
| **Operating environment** | Surrounding temperature | 5 - 40°C (41 - 104°F) |
| | Humidity | < 85% RH non-condensing |
| **Power supply** | Voltage/frequency | 200 - 240 V (50 - 60 Hz) |
| | Power inlet | 1-phase (N+L1+PE) or 2-phase (L1+L2+PE)<br>The electrical installation must comply with Installation Category II |
| | Power S1 | 1.1 kW |
| | Power S3 | 1.5 kW |
| | Power, idle | 13 W |
| | Current, max. | 14.8 A |
| **Cooling system** | | Tap water or recirculation system |

| | | |
|---|---|---|
| **Safety Circuit Categories/Performance Level** | Guard safety switch system | PL e, Category 3<br>Stop category 0 |
| | Guard lock | PL b, Category 3<br>Stop category 0 |
| | Hold-to-run function | PL d, Category 1<br>Stop category 0 |
| | Emergency stop | PL c, Category 1<br>Stop category 0 |
| | Unintended start of fluid system | PL b, Category 3 |
| | Axis speed monitoring, Y-table movement | PL d, Category 3<br>Stop category 0 |
| | Cut-off wheel monitoring and speed limitation | PL d, Category 3 |
| | Axis speed monitoring, vertical axis movement | PL d, Category 3 |
| **Exhaust** | Recommended capacity | 50 m³/h (1766 ft³/h) at 0 mm water gauge |
| **Advanced features** | X-table, automatic | Yes. Option |
| | X-stand, manual | Yes. Option |
| | Rotary stand | Yes. Option |
| **Noise level** | A-weighted sound emission pressure level at workstations | LpA = 66 dB(A) (measured value). Uncertainty K = 4 dB<br>Measurements made in accordance with EN ISO 11202 |
| **Vibration level** | Declared vibration emission | N/A |

| | | |
|---|---|---|
| **Dimensions and weight** | Width | 64.6 cm (25.4") |
| | Depth (with plug) | 78 cm (27.6") |
| | Height (guard closed) | 44 cm (17.3") |
| | Height (guard open) | 91 cm (35.8") |
| | Weight | 77 kg (170 lbs) |

## 12.2 Safety Circuit Categories / Performance Level

| Safety Circuit Categories / Performance Level | |
|---|---|
| Guard safety switch system | EN 60204-1, Stop category **0**<br>EN ISO 13849-1, Category **3**<br>Performance Level (PL) **e** |
| Guard lock | EN 60204-1, Stop category **0**<br>EN ISO 13849-1, Category **3**<br>Performance Level (PL) **b** |
| Hold-to-run function | EN 60204-1, Stop category **0**<br>EN ISO 13849-1, Category **3**<br>Performance Level (PL) **d** |
| Emergency stop | EN 60204-1, Stop category **0**<br>EN ISO 13849-1, Category **1**<br>Performance Level (PL) **c** |
| Unintended start of fluid system | EN ISO 13849-1, Category **3**<br>Performance Level (PL) **b** |
| Axis speed monitoring - Y-table movement | EN 60204-1, Stop category **0**<br>EN ISO 13849-1, Category **3**<br>Performance Level (PL) **d** |
| Cut-off wheel monitoring and speed limitation | EN ISO 13849-1, Category **3**<br>Performance Level (PL) **d** |
| Axis speed monitoring - Vertical axis movement | EN ISO 13849-1, Category **3**<br>Performance Level (PL) **d** |

## 12.3 Technical data - equipment units

For technical data covering the individual units of equipment, see the specific equipment manual.

## 12.4 Safety Related Parts of the Control System (SRP/CS)

**WARNING**

To ensure its intended safety, the guard must be replaced every 2 years. A label on the guard indicates when it is due to be replaced.

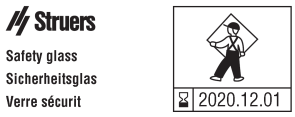


**WARNING**

Safety critical components must be replaced after a maximum lifetime of 20 years.
Contact Struers Service.

**Note**

SRP/CS (safety-related parts of a control system) are parts that have an influence on safe operation of the machine.

**Note**

Replacement of safety critical components must only be performed by a Struers engineer or a qualified technician (electromechanical, electronic, mechanical, pneumatic, etc.).
Safety critical components must only be replaced by components with at least the same safety level.
Contact Struers Service.

| Safety related part | Manufacturer/Manufacturer description | Manufacturer catalog no. |
|---|---|---|
| Sick IMB08 | Sick | IMB08-02BPSVU2K |
| Omron E2B_All | Omron | E2B-S08KS01-WP-B1 |
| Speed monitor | Sick | MOC3SA |
| Safety relay | Omron | G9SB |
| Safety sensor | Schmersal | BNS 120-02Z |
| Inverter | ATV | ATV320U15M2C |
| Relay 24 V AC/DC | Finder | 38.51.0.024.0060 |
| Emergency stop button | Schlegel<br>Latching mushroom head | ES ∅22 type RV |
| Emergency stop contact | Schlegel<br>Modular contact, momentary | 1 NC type MTO |
| Module holder | Schlegel<br>Module holder, 3 elem. MHR-3 | MHR-3 |
| Hold-to-run button | E-Switch | ULV7F2HSS341 |

| Safety related part | Manufacturer/Manufacturer description | Manufacturer catalog no. |
|---|---|---|
| Guard lock | Schmersal | AZM170SK-11/02ZRK-2197 24VAC/DC |
| Guard | Struers | 16850044 |
| Contactor | Omron | J7KNA_12_01_24VS |

**Note**
Struers catalogue numbers are listed in Spare parts ► 64.

## 12.5 Diagrams

**Note**
If you want to view specific information in detail, see the digital version of this manual.

| Title Secotom-60 | No. |
|---|---|
| Block diagram | 16853050 ► 81 |
| Water diagram | 16851005 ► 82 |
| Circuit diagram | See the diagram number on the name plate of the equipment, and contact Struers Service via Struers.com. |

## 16853050

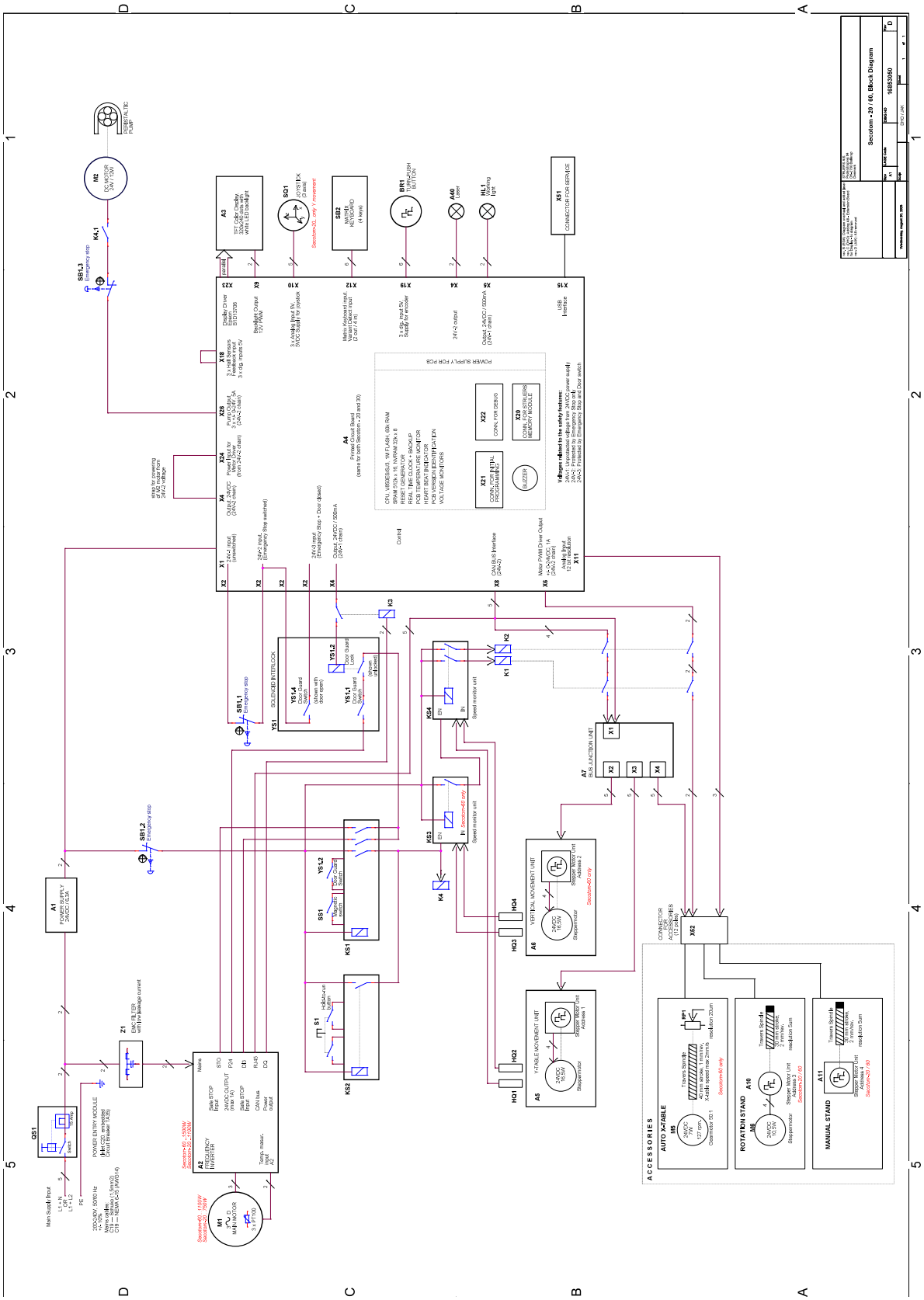
Secotom-29 / 60, Block Diagram
16853050
ACCESSORIES
AUTO X-TABLE
ROTATION STAND
MANUAL STAND
VERTICAL MOVEMENT UNIT
X-TABLE MOVEMENT UNIT
POWER SUPPLY FOR PCB
SOLENOID INTERLOCK
Main Supply Input
POWER ENTRY MODULE
EMC FILTER
FREQUENCY INVERTER
MAIN MOTOR
DC MOTOR
Emergency stop
Speed monitor unit
Stepper motor
Control
CONNECTOR FOR SERVICE
CONNECTOR FOR ACCESSORIES
Door Guard Lock
Door Guard Switch
Door Guard Contact
Magnetic switch
Hall-sensor
Display Driver
Pump Output
Power Input for Pump
Output 24VDC / 500mA
Motor Keyboard input
3 x digital input 0V
3 x digital input 24V
24VDC output
USB Interface
Motor PWM Driver Output
Analog Input
CAN BUS Interface
Safety Input
Safety Output
Main Board
Power Supply
Motor
Pump
Lamp
Switch
Sensor
Fuse
Relay
Contactor
Transformer
Capacitor
Resistor
Diode
Connector
Terminal
Cable
Wire
Earth
Protective Earth
Signal
Power
Data
Bus
Input
Output
Analog
Digital
Serial
Parallel
Interface
Module
Board
Unit
Assembly
Component
Equipment
Device
Machine
System
Control
Monitor
Display
Keyboard
Touch
Screen
Panel
Cabinet
Housing
Frame
Chassis
Base
Foot
Leg
Wheel
Roller
Guide
Rail
Track
Slide
Bearing
Shaft
Spindle
Screw
Nut
Bolt
Washer
Spring
Damper
Shock
Vibration
Noise
Temperature
Humidity
Pressure
Flow
Level
Speed
Position
Angle
Distance
Weight
Force
Torque
Power
Energy
Voltage
Current
Resistance
Capacitance
Inductance
Frequency
Phase
Amplitude
Waveform
Signal
Data
Bus
Input
Output
Analog
Digital
Serial
Parallel
Interface
Module
Board
Unit
Assembly
Component
Equipment
Device
Machine
System
Control
Monitor
Display
Keyboard
Touch
Screen
Panel
Cabinet
Housing
Frame
Chassis
Base
Foot
Leg
Wheel
Roller
Guide
Rail
Track
Slide
Bearing
Shaft
Spindle
Screw
Nut
Bolt
Washer
Spring
Damper
Shock
Vibration
Noise
Temperature
Humidity
Pressure
Flow
Level
Speed
Position
Angle
Distance
Weight
Force
Torque
Power
Energy
Voltage
Current
Resistance
Capacitance
Inductance
Frequency
Phase
Amplitude
Waveform

## 16851005

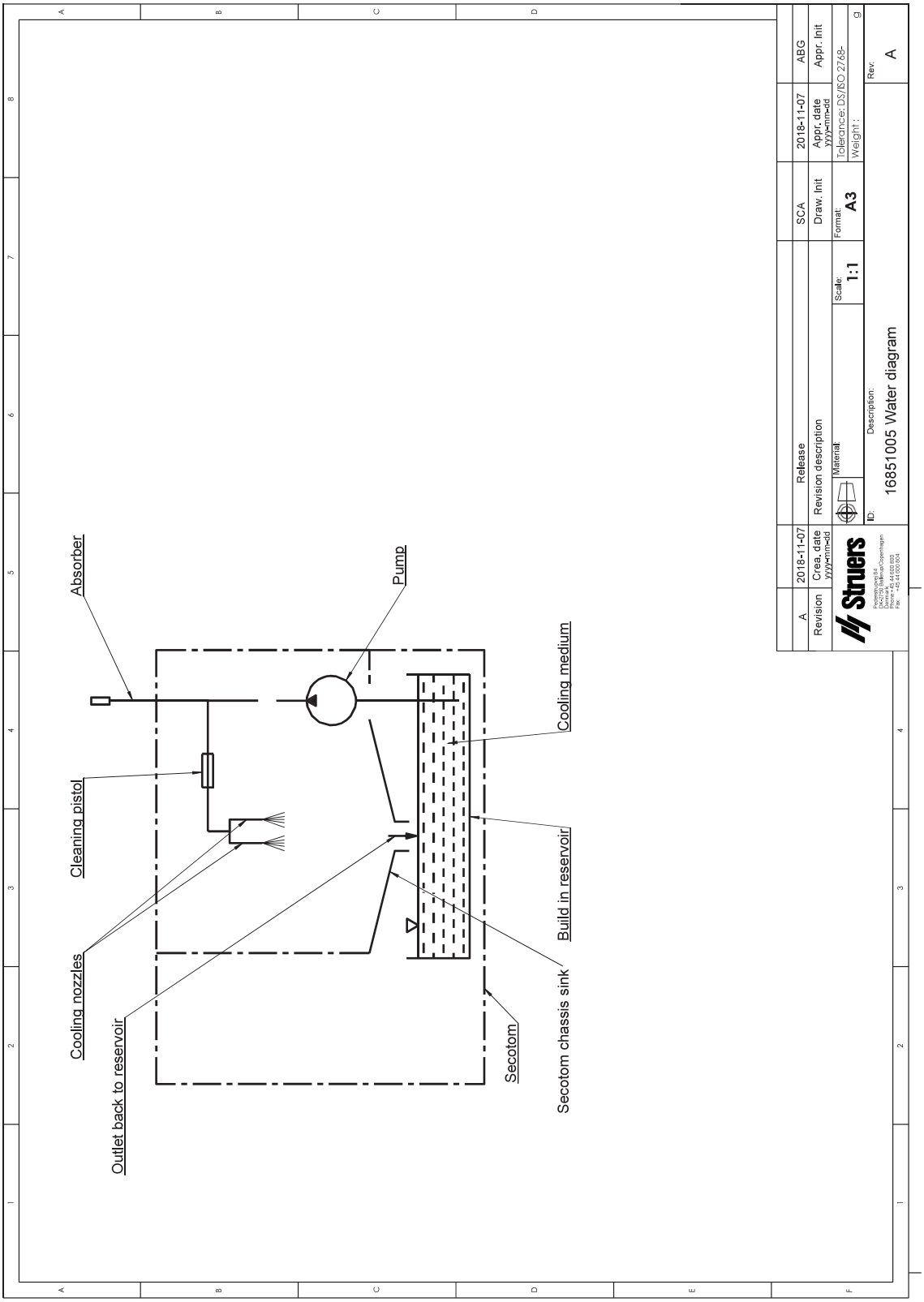
Absorber
Cleaning pistol
Cooling nozzles
Outlet back to reservoir
Pump
Secotom
Secotom chassis sink
Build in reservoir
Cooling medium
A
Revision
2018-11-07
Crea. date
yyyy-mm-dd
Release
Revision description
SCA
Draw. Init
2018-11-07
Appr. date
yyyy-mm-dd
ABG
Appr. Init
Material:
Scale:
1:1
Format:
A3
Tolerance: DS/ISO 2768-
Weight :
Rev:
A
Description:
16851005 Water diagram
ID:
Struers

## 12.6 Legal and regulatory information

### FCC notice

This equipment has been tested and found to comply with the limits for a Class B digital device, pursuant to part 15 of the FCC Rules. These limits are designed to provide reasonable protection against harmful interference in a residential installation. This equipment generates, uses and can radiate radio frequency energy and, if not installed and used in accordance with the instructions, may cause harmful interference to radio communications. However, there is no guarantee that interference will not occur in a particular installation. If this equipment does cause harmful interference to radio or television reception, which can be determined by turning the equipment off and on, the user is encouraged to try to correct the interference by one or more of the following measures:

- Reorient or relocate the receiving antenna.
- Increase the separation between the equipment and receiver.
- Connect the equipment into an outlet on a circuit different from that to which the receiver is connected.

### EN ISO 13849-1:2015

All SRP/CS are limited to a lifetime of 20 years. After expiration of this period, all components must be replaced.

# 13 Manufacturer

Struers ApS
Pederstrupvej 84
DK-2750 Ballerup, Denmark
Telephone: +45 44 600 800
Fax: +45 44 600 801
www.struers.com

### Responsibility of the manufacturer

The following restrictions should be observed, as violation of the restrictions may cause cancellation of Struers legal obligations.

The manufacturer assumes no responsibility for errors in the text and/or illustrations in this manual. The information in this manual is subject to change without notice. The manual may mention accessories or parts not included in the supplied version of the equipment.

The manufacturer is to be considered responsible for effects on safety, reliability, and performance of the equipment only if the equipment is used, serviced, and maintained in accordance with the instructions for use.

Struers
Ensuring Certainty

Based on: 16857901 F

# Declaration of Conformity

| | |
|---|---|
| **Manufacturer** | Struers ApS • Pederstrupvej 84 • DK-2750 Ballerup • Denmark |
| **Name** | Secotom-6<br>Secotom-20<br>Secotom-60 |
| **Model** | N/A |
| **Function** | Cut-off machine |
| **Type** | 685 |
| **Cat. no.** | 06856127, 06856227, 06856327 |
| **Module** | A, according to global approach |
| **Serial no.** | |

**We declare that the product mentioned is in conformity with the following legislation, directives and standards:**

| | |
|---|---|
| **2014/30/EU** | EN 61000-6-2:2005/Corr.:2005, EN 61000-6-2:2005, EN 61000-6-3:2007, EN 61000-6-3-A1:2011, EN 61000-6-3-A1-AC:2012, EN 61000-3-3:2013, EN 61000-3-2:2014 |
| **2011/65/EU** | EN 63000:2018 |
| **2023/1213** | EN ISO 12100:2010, EN ISO 13849-2:2012, EN ISO 16089:2015, EN ISO 13850:2015, EN ISO 13849-1:2023, EN ISO 60204:2018, EN ISO 13857:2019, EN 60204-1-2018/Corr.:2020 |
| **Additional standards** | NFPA 79, FCC 47 CFR Part 15 Subpart B |

Authorized to compile technical file/
Authorized signatory

Date: [Release date]
Ballerup, Denmark

EU CE

Struers
Ensuring Certainty

| | |
|---|---|
| en | For translations see |
| bg | За преводи вижте |
| cs | Překlady viz |
| da | Se oversættelser på |
| de | Übersetzungen finden Sie unter |
| el | Για μεταφράσεις, ανατρέξτε στη διεύθυνση |
| es | Para ver las traducciones consulte |
| et | Tõlked leiate aadressilt |
| fi | Katso käännökset osoitteesta |
| fr | Pour les traductions, voir |
| hr | Za prijevode idite na |
| hu | A fordítások itt érhetők el |
| it | Per le traduzioni consultare |
| ja | 各種文書の翻訳版は次を参照 |
| lt | Vertimai patalpinti |
| lv | Tulkojumus skatīt |
| nl | Voor vertalingen zie |
| pl | Aby znaleźć tłumaczenia, sprawdź |
| pt | Consulte as traduções disponíveis em |
| ro | Pentru traduceri, consultați |
| se | För översättningar besök |
| sk | Preklady sú dostupné na stránke |
| sl | Za prevode si oglejte |
| zh | 翻译见 |

www.struers.com/Library